MICHELIN® TRUCK TIRE SERVICE MANUAL

WWW.MICHELINTRUCK.COM

MICHELIN

Introduction

Read this manual carefully — it is important for the SAFE operation and servicing of your tires.

Michelin is dedicated and committed to the promotion of Safe Practices in the care and handling of all tires. This manual is in full compliance with the Occupational Safety and Health Administration (OSHA) Standard 1910.177 relative to the handling of single and multi-piece wheels.

The purpose of this manual is to provide the MICHELIN® Truck Tire customer with useful information to help obtain maximum performance at minimum cost per mile. MICHELIN® radial tires are a significant investment and should be managed properly. This manual is a collection of best practices that will assist fleets to increase their tire knowledge. The manual covers the full life cycle of the tire: selection, vehicle characteristics that affect performance, maintenance, and tire life extension through repair and retreading. For complete tire specifications, refer to the MICHELIN® Truck Tire Data Book, contact your local MICHELIN® Representative, or refer to the MICHELIN® website: www.michelintruck.com.

MICHELIN® tires and tubes are subject to a continuous development program. Michelin North America, Inc. reserves the right to change product specifications at any time without notice or obligation.

Please consult wheel manufacturer's load and inflation limits. Never exceed wheel manufacturer's limits without their authorization.

This is the safety alert symbol. It is used to alert you to potential personal injury hazards. Obey all safety messages that follow this symbol to avoid possible injury or death.

⚠WARNING WARNING indicates a hazardous situation which, if not avoided, could result in death or serious injury.

NOTICE NOTICE is used to address practices not related to personal injury.

Table of Contents

Section One

Tire Selection 1-14

WHICH MICHELIN® TIRE? 2

PROPER NAMING AND SEGMENTATION 3

PROPER APPLICATION 3

TRUCK TIRE APPLICATION 4-5

DETERMINING MICHELIN® TIRE SIZE 6-7

TREAD DESIGN 8

DEFINITIONS 9-12

- DOT Sidewall Markings
- Loads Per Axle and Inflation Pressures
- Wheels
- Maximum Speed Restrictions
- Static And Low Speed Load and Pressure Coefficients
- TRA (The Tire and Rim Association, Inc.) Standards
- Technical Specifications for MICHELIN® 455/55R22.5 LRM on 13.00x22.5 Wheels Steer Axle, First Life Only

TRUCK TYPE BY WEIGHT CLASS 13-14

Section Two

Selecting a Wheel 15-26

WHEEL SYSTEMS 16-21

- Steel vs Aluminum
- Special Considerations for Aluminum Wheels
- Special Fasteners
- Wheel Type
  - – Hub Piloted Wheels
  - – Stud Piloted Wheels
  - – Cast Spoke Wheels
- Torque
- Disc Wheel Installation Procedure – Recommended Mounting Torque for Disc Wheel

SELECTING A WHEEL 22

- Outset/Inset
- Use of Outset Wheel with MICHELIN® X One® Tires
- Drop Center

VALVE SYSTEMS 23-25

- Loose and Leaky Valve Stems
- Proper Fasteners for MICHELIN® X One® Tires on Stud Piloted Wheels

WHEEL SPECIFICATIONS 26

Section Three

Mounting the Tire 27-48

WARNINGS 28-31

- Zipper Ruptures
- Tire Inspection
- Selection of Proper Components and Materials
- Inflation Safety Recommendations
- Tire and Wheel Lubrication
- Preparation of Wheels and Tires

GENERAL INSTRUCTIONS FOR TUBELESS TIRE MOUNTING/DEMOUNTING 32-33

- Tubeless Tire Mounting/Demounting Using a Mounting Machine

TUBELESS TIRE MOUNTING/DEMOUNTING 34-42

- Mounting Tubeless
- 19.5" Aluminum Wheels
- 19.5" Steel Wheels
- Special Tools / Mounting MICHELIN® X One® Tires
- Inflation of Tubeless Tires
- Demounting of Tubeless Tires

MISMOUNT 43-44

- Three Easy Steps to Help Minimize Mismounted Tires

MOUNTING THE ASSEMBLY ON THE VEHICLE 45-48

- Dual Spacing
- Technical Considerations for Fitting Tires
- Measuring Tires in Dual Assembly
- Tire Mixing
- Runout

Section Four

Extending Tire Life 49-80

MAINTAINING THE TIRE 50-58

- Inflation Pressure 50
  - - Underinflation
  - - Overinflation
  - - Proper Inflation
  - - How to Properly Measure Pressure
  - - Temperature/Pressure Relationship Graph
  - - Nitrogen
- Footprint Comparisons to Dual Tire Fitments
- Sealants - Foreign Matter in Tires
- Tire Inspection
- Automated Tire Inflation System (ATIS) or Tire Pressure Monitoring System (TPMS)
- Drive Carefully
- Tread Depth Measurements
- Wear Bars
- Do Not Overload
- Drive at Proper Speeds
- Balance and Runout

CARE, CLEANING, AND STORAGE 59-62

- Storage
- Stacking of MICHELIN® X One® Tires
- Flood Damage
- Cleaning and Protection
- Diesel Fuel Contamination
- Chains
- Tire Damage Resulting from Non-Compliant Runflat/Beadlock Devices
- Recommendations for Use of Dynamometers
- Spinning
- Rotation
- Siping
- Branding

MAINTAINING THE VEHICLE 63-80

- Major Vehicle Factors That Affect Tire Life 63
  - - Alignment
  - - Steer Axle Geometry
  - - Toe
  - - Tandem Axle Parallelism (Skew - Thrust)
  - - Thrust Angle (Tracking)
  - - Camber

Table of Contents

- Caster
- Steer Axle Setback (Steer Axle Skew)
- Toe-Out-On-Turns (Turning Radius)
- TMC Recommended Alignment Targets
- Periodic Alignment Checks
- Alignment Equipment
- Field Check Techniques
- Axle Parallelism and Tracking
- How to Check Axle Parallelism and Tracking

Tire Wear Patterns Due to Misalignment **70**
- Toe Wear
- Free Rolling Wear
- Camber Wear
- Cupping Wear
- Flat Spotting Wear
- Diagonal Wear

Irregular Tire Wear **73**
- Heel-Toe
- Center Wear
- River Wear Only
- Step-Shoulder/Localized Wear Shoulder Cupping
- Brake Skid

Braking Systems and Issues **75**
- Summary of Tire Issues Due to Brakes
- Brake Heat Overview

Fifth Wheel Maintenance and Placement..... **78**
Wheel Bearing and Hub Inspection..... **78**
Suspensions **78**
- Air Suspension Systems
- Quick Checks for Trailer System Faults
- Quick Checks for Front Suspension Faults
- Quick Checks for Rear Suspension Faults

Section Five

MICHELIN® X One® Tires..... 81-112

DRIVER INFORMATION **82**
AXLES AND WHEEL ENDS **83**
Axle Identification Tags
Load Ratings
SPINDLES..... **86**
OVERALL VEHICLE TRACK AND WIDTH..... **87**
Use of Outset Wheels with MICHELIN® X One® Tires
Axles Track Widths
Vehicle Track
BEARINGS **89**
ENGINE COMPUTERS / FUEL ECONOMY **90**
AIR INFLATION AND PRESSURE MONITORING SYSTEMS..... **90**
The Use of Pressure Monitoring and Inflation Systems with MICHELIN® Truck Tires
Automated Tire Inflation Systems (ATIS) on Trailers and Missed Nail Holes
TRUCK TYPE BY WEIGHT CLASS **92**
Recommendation for use of MICHELIN® X One® Tires in 4x2 Applications
TIRE PRESSURE MAINTENANCE PRACTICES **94**
Comparative MICHELIN® X One® Tire Sizes Wheel
MICHELIN® X One® Tire Mounting Instructions
HEAT STUDY..... **96**
Brake Heat Overview
Brake Heat Evaluation: MICHELIN® X One® Tires vs Duals
TIME LABOR STUDY – MICHELIN® X ONE® TIRES VS DUAL ASSEMBLY **100-101**
Torque
RETREAD AND REPAIR RECOMMENDATIONS..... **102-106**
Repair Recommendations
Retread Recommendations
Chains
Gear Ratio
Footprint Comparisons to Dual Tire Fitments
OPERATION AND HANDLING **107-112**
Over-Steer
Under-Steer
Cornering Stiffness for Different Tires
Hydroplaning
Rollover Threshold
Jack-Knife
Rapid Tire Pressure Loss Procedure
Traction
Chains
Stopping Distances
Limping Home
State and Local Regulations

Section Six

MICHELIN® RV Tires..... 113-124

MAINTAINING RECREATIONAL VEHICLE TIRES **114-120**
The Importance of Inflation Pressure
Inflation Pressure Requirements
When to Check Recreational Vehicle Tire Pressure
Tire Repairs
Tread Depth Measurements and Wear Bars
Dual Spacing
Directional Tires
Tire Pressure Monitoring Systems (TPMS)
Nitrogen
Workmanship and Materials
Location of Tire Identification Code
Service Life for Recreational Vehicle Tires
Selecting Alternative Tire Sizes
Drive at Proper Speeds
Long Term Storage
Aging, Weather Checking, and Ozone Cracking
Proper Cleaning of RV Tires
Tire Rotation, Balance, Alignment and Tire Wear
Common Tire Damages
HOW TO WEIGH THE RECREATIONAL VEHICLE..... **121-124**
How to Weigh the RV
Three Different Types of Scales
Weighing the Single Axle Recreational Vehicle
Weighing the Tandem Axle Recreational Vehicle
The Effect of Towed Vehicles or Trailers
How to Use the Actual RV Weight Information with the Tire Data Load Chart
Using Blocks to Level Motorhomes and RVs Equipped with Radial Tires

Table of Contents

Section Seven

Repairs and Retread 125-130

REPAIRS 126-130

Two-Piece Radial Truck Nail Hole Repair Method Instructions

MICHELIN® X One® Tires Nail Hole Repair Method Instructions

Blue Identification Triangle

RETREAD 130

Section Eight

Diagonal (Bias Or Cross) Ply and Tube-Type 131-142

THE DIAGONAL (BIAS OR CROSS) PLY 132-134

Definitions

Tube-Type Tire

Truck Tire Size Markings

Repair and Retread

Static and Low Speed Load and Pressure Coefficients

TRA (The Tire and Rim Association, Inc.) Standards

GENERAL INSTRUCTIONS FOR TUBE-TYPE TIRE DEMOUNTING/MOUNTING 135-137

Selection of Proper Components and Materials

Inflation Safety Recommendations

Tire and Wheel Lubrication

Preparation of Wheels and Tires

Storage

MOUNTING TUBE-TYPE TIRES 138-140

Mounting Tube-Type Tires Using Manual Spreaders

Mounting Tube-Type Tires Using Automatic Spreaders

Inflation of Tube-Type Tires

DEMOUNTING TUBE-TYPE TIRES 141-142

Section Nine

Tire Damage 143-158

EFFECT AND CAUSES 143

TIRE INSPECTION 144-145

RUN-FLAT 146-147

AIR INFILTRATION 148-151

The Use of Internal Balancing Materials and/or Coolants in MICHELIN® Truck Tires

PINCH SHOCK 152

MINIMUM DUAL SPACING 152

IMPACT DAMAGE 153

FATIGUE RELATED DAMAGE 154

BEAD DAMAGE 155

ADDITIONAL CAUSES: REPAIRS AND RETREADING CONDITIONS 156-157

SCRAP INSPECTION FORM 158

Section Ten

Appendix 159-187

GENERAL INFORMATION 160-163

Units of Measurement

Pressure Unit Conversion Table

Load Range/Ply Rating

Approximate Weight of Materials

Load Index

Conversion Table (Standard – Metric – Degrees)

Speed Symbol

RUNOUT TOLERANCES 164

FRONT END ALIGNMENT 164

Toe

Camber

Caster

AXLE ALIGNMENT 165

Tandem Scrub Angle or Skew

Thrust Angle Deviation

Steering Axle Offset

Drive Axle Offset

Steering Axle Skew

ALIGNMENT - FIELD METHOD 166-167

CASING MANAGEMENT 168-169

COLD CLIMATE PRESSURE CORRECTION DATA 169

COST ANALYSIS 170

FUEL SAVINGS 171

MOUNTING PROCEDURES FOR 16.00R20 AND 24R21 172

TIRE REVOLUTIONS PER MILE CALCULATION 173

OUT-OF-SERVICE CONDITIONS 174-175

RUNOUT AND VIBRATION DIAGNOSIS 176-178

SERVICING MULTI-PIECE AND SINGLE PIECE RIM/WHEELS (OSHA 1910.177) 179-181

REGROOVING 182-183

TRANSIT APPLICATIONS IN URBAN CONDITIONS 184

THE CRITICAL 6 - FACTORS THAT COST FLEETS MONEY 185

PUBLICATIONS, VIDEOS, AND WEBSITES 186-187

INDEX 188

SECTION ONE

Tire Selection

Tire Selection 1-14

WHICH MICHELIN® TIRE? 2

PROPER NAMING AND SEGMENTATION 3

PROPER APPLICATION 3

TRUCK TIRE APPLICATION 4-5

DETERMINING MICHELIN® TIRE SIZE 6-7

TREAD DESIGN 8

DEFINITIONS 9-12

- DOT Sidewall Markings
- Loads Per Axle and Inflation Pressures
- Wheels
- Maximum Speed Restrictions
- Static And Low Speed Load and Pressure Coefficients
- TRA (The Tire and Rim Association, Inc.) Standards
- Technical Specifications for Michelin 455/55R22.5 LRM on 13.00x22.5 Wheels Steer Axle, First Life Only

TRUCK TYPE BY WEIGHT CLASS 13-14

WHICH MICHELIN® TIRE?

TREAD PATTERN DESIGNATION

Michelin uses specific numbers or letters to identify different types of tread patterns or casing construction.

X® MULTI™ ENERGY D

Application — Benefit — Position

For example:

MICHELIN® Radial	X = MICHELIN® Radial
Prefix	X One® = Wide Single Tire Replacing 2 Traditional Duals
Application*	A = X® LINE™ = Highway Applications E = X® MULTI™ = Regional Applications Y = X® WORKS™ = 80% On-Road Use, 20% Off-Road Use L = X® FORCE™ = 20% On-Road Use, 80% Off-Road Use U = X® INCITY™ = Urban Use X® COACH™ = Coach and Recreational Vehicle Use
Benefit	ENERGY = Fuel Efficient GRIP = All Season Grip ✪ = Anti-chip / Cut-resistant Compound M/S = Mud and Snow S = Severe Service + = Enhanced Version
Position	D = Drive T = Trailer Z = All Position F = Front (Steer)
Index	Number at the end of the designation used to denote product evolution or attributes.

* A, E, Y, L, U = Traditional Application Designations; X® LINE™, X® MULTI™, X® WORKS™, X® FORCE™, X® INCITY™, X® COACH™ = New Application Designations; Michelin will progressively replace the traditional application designations with the new ones.

Federal Motor Carrier Safety Regulations, 9 C.F.R. § 395.75 (d), specify that "no bus shall be operated with regrooved, recapped or retreaded tires on the front wheels."

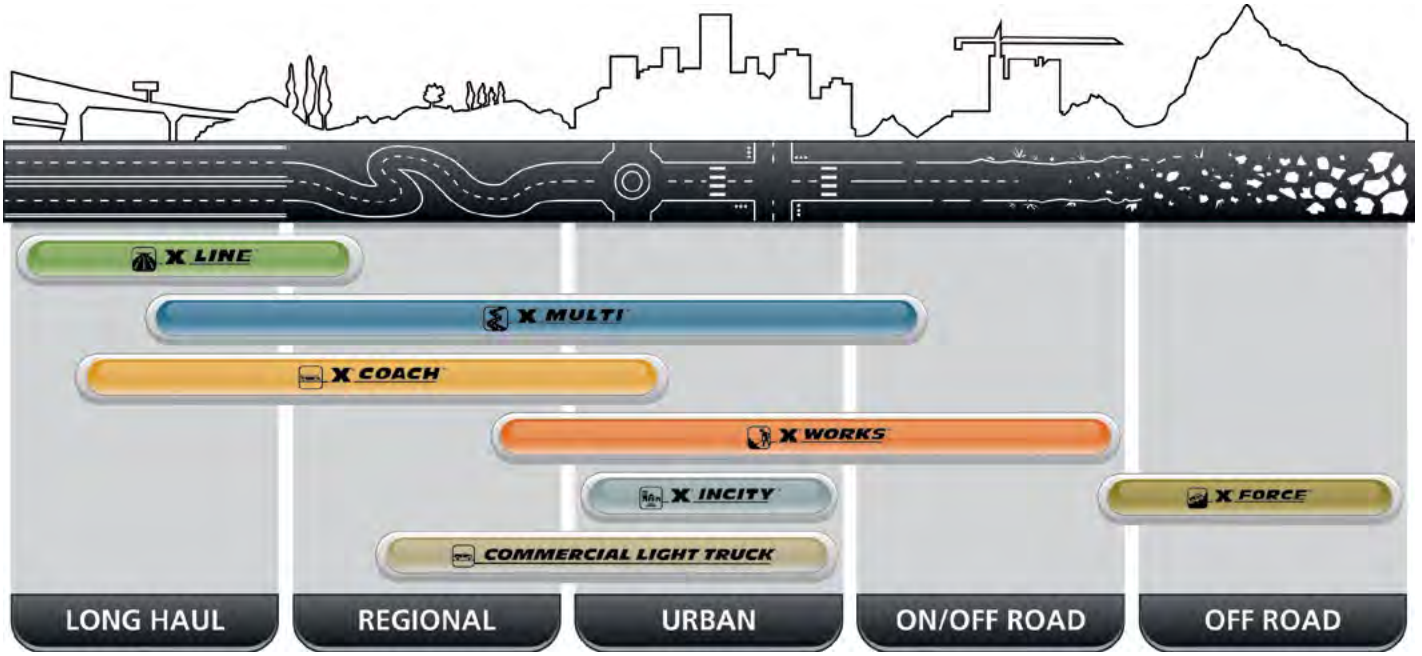

PRODUCT NAMING AND SEGMENTATION

The specific tread design used should only be considered after the vehicle type and user vocation has been examined. There are several categories of tire service applications:

SEGMENT	APPLICATION (1) NAME		PICTOGRAMS	APPLICATIONS	VOCATIONS
Line Haul	A	X® LINE™		Heavy loads and high speeds for extended periods of time. Primarily interstate or divided highway.	• Truckload Carrier
Regional	E	X® MULTI™		Regional is medium to heavy loads, frequently on 2-lane roads. Vehicles generally return to home base at night. Emerging Super Regional application combines driving conditions seen in Line Haul and Regional applications.	• LTL Dry Van • Parcel • Food & Beverage • Pick-up & Delivery
On/Off Road	Y	X® WORKS™		Heavy loads and slower speeds, operating on a mixture of improved secondary and aggressive road surface.	• Construction and Mining • Forestry and Logging • Oil Field
Off Road	L	X® FORCE™		Very heavy loads normally on poor or unimproved surfaces.(2)	• Forestry and Logging • Oil Field
Urban	U	X® INCITY™		Stop-and-go delivery ... service within a limited radius – metro and suburban.	• Urban Buses • Sanitation and Refuse
Coach and Recreational		X® COACH™		Coaches and recreational vehicles	• Buses • RV

D = Drive Positions, T = Trailer Positions, Z = All-Wheel Positions
(1) A, E, Y, L, U = Traditional Application Designations. X® LINE™, X® MULTI™, X® WORKS™, X® FORCE™, X® INCITY™, X® COACH™ = New Application Designations. Michelin will progressively replace the traditional application designations with the new ones.
(2) Off Road Tires can also be used On Road if DOT is present.

PROPER APPLICATION

URBAN TIRES:
U or X® INCITY™

The tires with the **"U"** or **"INCITY"** designation are designed and optimized for **urban applications** and should not be used in non-urban/suburban applications including but not limited to, line haul and RV/motorhomes/coaches. These aforementioned applications may subject the tires to continuous use over an extended period of time. This could lead to heat build up and may cause the tire to fail prematurely and/or suddenly.

ON/OFF ROAD TIRES:
Y or X® WORKS™ and L or X® FORCE™

The tires with "Y" or "X® WORKS™" and "L" or "X® FORCE™" as the third character in the tread designations are designed and optimized for on/off road applications and are speed restricted. These tires should not be used in applications that operate the tires continuously on highway over an extended period of time or at speeds that exceed the speed rating of the tire. This could lead to heat build up and cause premature or sudden tire failure.

Tires with the "Y" or "X® WORKS™"designation are for applications expected to be 80% On-road use and 20% Off-road use. They have a maximum speed of 65 mph.

Tires with the "L" or "X® FORCE™" designation are for applications expected to be 20% On-road use and 80% Off-road use. Some of the "L" or "X® FORCE™" designated tires have a maximum speed of 50 mph while others have maximum speeds of 55, 60 and of 70 mph.

The Tire and Rim Association (TRA) permits operating a 65 mph rated tire at higher speeds with a reduced load and increased inflation. No such permission is granted by TRA for tires with speed rating rated below 65 mph.

Always refer to the MICHELIN® Truck Tire Data Book (MWL40731) or www.michelintruck.com and match the tire to the application when making tire selections.

TRUCK TIRE APPLICATION

The choice of tire type depends upon the application and wheel position. No matter what your application may be, Michelin has a tire specifically designed for you. These applications include the following:

Line Haul (A or X® LINE™)

The Line Haul application is made up of businesses operating primarily in common carrier and lease rental vocations. Vehicle annual mileage – 80,000 miles to 200,000 miles.

Regional (E or X® MULTI™)

The Regional application is made up of businesses such as public utilities, government – federal, state, and local – food distribution/process, manufacturing/ process, petroleum, and schools operating within a 300-mile radius. Vehicle annual mileage – 30,000 miles to 80,000 miles.

Urban (U or X® INCITY™)

Urban applications are very short mileage with a high percentage of stop and go. Primary users are in retail/ wholesale delivery, sanitation, and bus fleets. Vehicle annual mileage – 20,000 miles to 60,000 miles.

Coach and Recreational (X® COACH™)

Buses and recreational vehicles.

Commercial Light Truck Tire Applications

- Highway Tires, All-Wheel-Position
- All-Season, All-Terrain Tires
- All-Terrain Drive Axle Traction Tires
- Highway Mud & Snow Tires

On/Off-Road (Y or X® WORKS™)

On/Off Road tires are designed to provide the durability and performance necessary in highly aggressive operating conditions at limited speeds. Vocations such as construction, mining, and refuse use these highly specialized tires. Vehicle annual mileage – 10,000 miles to 70,000 miles.

Special Tire Applications/Off-Road (L or X® FORCE™)

- Drive & Steer
- Fork Lift/Utility Vehicles
- Indoor/Outdoor Applications

MICHELIN® X ONE® TIRE APPLICATIONS

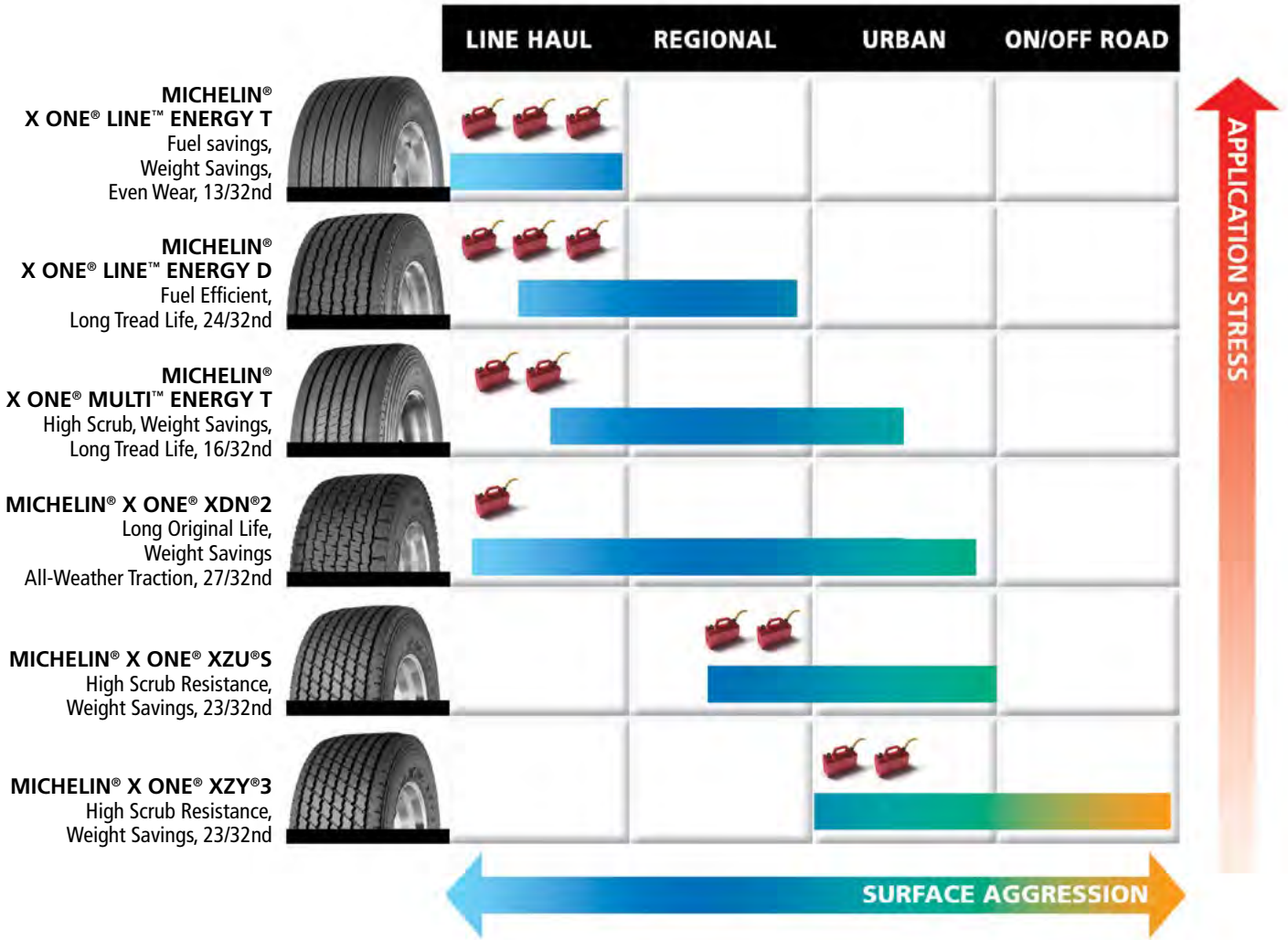

DETERMINING MICHELIN® TIRE SIZE

1. **Tire Size:** MICHELIN® radial truck tire sizes are designated by the nominal section width in inches or millimeters and the wheel diameter (e.g. 11R22.5 or 275/80R22.5). The "R" indicates a radial tire. Truck tire sizes contain dimension and load index information and are marked in accordance with industry standards: FMVSS (Federal Motor Vehicle Safety Standard), TRA (The Tire and Rim Association, Inc.), ETRTO (European Tyre and Rim Technical Organisation), and ISO (International Standardization Organization). This index indicates the load capacity of the tire in single and in dual usage (e.g. 144/141K). See Appendix under General Information (Page 162) for complete ISO load index. Below are examples for tubeless tires. (See Section Eight, Pages 131-142, for tube-type tire information.)

Example: 11R22.5

11 = nominal cross section in inches
R = radial
22.5 = wheel diameter in inches

Example: 275/80R22.5 LRG 144/141K

275 = nominal cross section in mm (metric)
80 = aspect ratio
R = radial
22.5 = wheel diameter in inches
LRG = load range G

COMPARATIVE SIZES LOW-PROFILE – STANDARD PROFILE

MICHELIN	TRA	REPLACES
235/80R22.5	245/75R22.5	9R22.5
255/80R22.5	265/75R22.5	10R22.5
275/80R22.5	295/75R22.5	11R22.5
275/80R24.5	285/75R24.5	11R24.5

COMPARATIVE MICHELIN® X ONE® TIRE SIZES

DUAL SIZE	MICHELIN® X ONE® TIRE SIZE
11R22.5, 275/80R24.5	455/55R22.5
275/80R22.5	445/50R22.5

2. **Overall Width:** The maximum width (cross section) of the unloaded tires including protruding side ribs and decorations as measured on the preferred wheel. Overall width will change 0.1 inch (2.5 mm) for each 1/4 inch change in wheel width. Minimum dual spacing should be adjusted accordingly.
3. **Nominal Wheel Diameter:** Diameter of wheel seat supporting the tire bead given in nearest half-inch numbers, e.g. 22.5".
4. **Overall Diameter:** The diameter of the unloaded new tire (measured from opposite outer tread surfaces).
5. **Section Height:** The distance from wheel seat to outer tread surface of unloaded tire.
6. **Aspect Ratio:** A nominal number, which represents the section height, divided by the section width and expressed as a percentage.

Example:	Tire Size	Aspect Ratio
	11R22.5	90
	275/80R22.5	80
	445/50R22.5	50

7. **Free Radius:** One-half the overall diameter of the unloaded new tire.
8. **Loaded Radius:** The distance from the wheel axle centerline to the supporting surface under a tire properly inflated for its load according to the load and inflation tables found in the application specific data books. See Appendix for listing of publications under Publications, Videos, and Websites (Page 186-187).
9. **Tire Deflection:** Free radius minus the loaded radius.
10. **Minimum Dual Spacing:** The minimum allowable lateral distance from tire tread centerline to tire tread centerline in a dual wheel arrangement.
11. **Tire Revolutions Per Mile:** Revolutions per mile for a tire size and tread is defined as the number of revolutions that the new tire will make in one mile. Data is normally presented for the loaded tire at its rated load and inflation in the drive position. Rolling circumference can be calculated from the revolutions per mile as follows:

$$\frac{63{,}360}{\text{Tire Revs./Mile}} = \text{Rolling circumference in inches}$$

The tire revolutions per mile can be determined by measuring (using SAE J1025) or estimated by using a mathematical equation. See Appendix under Tire Revolutions Per Mile Calculation (Page 173). The accuracy of the tire revolutions per mile number is ±1%.

12. **Wheels:** The approved/preferred wheels are designated for each tire size. MICHELIN® tires should only be mounted on the wheels shown. The wheel shown first is the preferred wheel. Be sure to check wheel manufacturer's specifications.

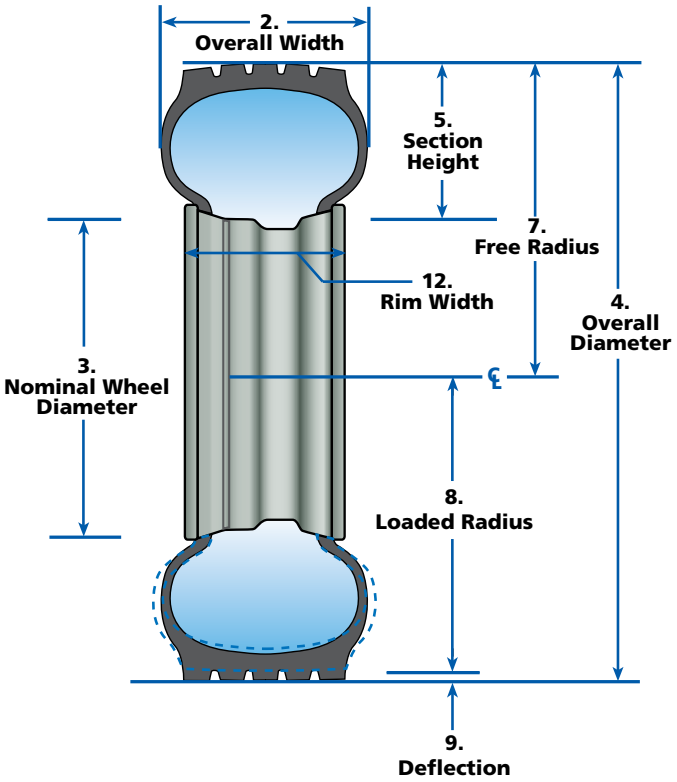

All the information required to determine the proper tire size is contained in the application specific data books. A sample is shown below.

To select the proper tire size for a vehicle, it is necessary to know the maximum axle wheel end loads that the tires will carry and the maximum continuous speed at which they will operate. The maximum load that a tire can carry is different if it is mounted in dual configuration rather than single. The allowable axle loads and the required inflation pressures to carry these loads are shown in the charts for both single and dual mountings in the MICHELIN® Truck Tire Data Book (MWL40731). The maximum allowable continuous speed is also indicated.

CHANGES TO LOAD AND INFLATION PRESSURE FOR COMMERCIAL TRUCK TIRES

2003 DOT standards require that both Metric and English load, pressure, and speed units be marked on tires. In order to meet this new requirement, Michelin changed its maximum load at cold inflation pressure markings to ensure alignment with standards published by TRA (The Tire and Rim Association, Inc.) and ETRTO (The European Tyre and Rim Technical Organisation). All MICHELIN® truck tires manufactured after January 1, 2002 (DOT week 0102) carry the new markings.

Data books published since then reflect the changes in maximum loads at various cold pressures. The MICHELIN® truck tire website, www.michelintruck.com, was also updated to reflect these changes.

NOTICE

Always refer to the actual sidewall markings for maximum load at cold inflation pressure information.

There may still be some new or retreaded tires in use with the old markings. During this period of transition, customers may have tires with the same MSPN with different load and inflation markings. The guidelines below should be followed when mounting tires of the same size with different markings on the same vehicle.

1. Make sure the tire maximum load and cold inflation pressure markings do not exceed those of the wheel.
2. If tires with different maximum load markings are mixed across an axle, apply the lowest load and cold pressure markings to all tires.
3. Ensure that the tire markings are adequate to meet the vehicle GAWR (Gross Axle Weight Rating) for all axles.

Specifications for Tread Design: MICHELIN® X® LINE™ ENERGY Z

Size	Load Range	Catalog Number	Tread Depth	Max. Speed (*)	Loaded Radius		Overall Diameter		Overall Width (‡)		Approved Wheels (Measuring wheel listed first.)	Min. Dual Spacing (‡)		Revs Per Mile	Max. Load and Pressure Single				Max. Load and Pressure Dual			
			32nds	mph	in.	mm	in.	mm	in.	mm		in	mm		lbs.	psi	kg.	kPa	lbs.	psi	kg.	kPa
275/80R22.5 (1,2)	G	03885	19	75	18.6	473	40.1	1018	11.0	280	8.25, 7.50	12.2	311	518	6175	110	2800	760	5675	110	2575	760

275/80R22.5 LRG MICHELIN® X® LINE™ ENERGY Z

WHEEL DIAMETER 22.5"	PSI	70	75	80	85	90	95	100	105	110	MAXIMUM LOAD AND PRESSURE ON SIDEWALL	
	kPa	480	520	550	590	620	660	690	720	760		
275/80R22.5 LRG	LBS SINGLE	9000	9450	9880	10310	10740	11020	11560	11960	12350	S	6175 LBS AT 110 PSI
	LBS DUAL	16380	17200	18160	18760	19540	20280	21040	21760	22700	D	5675 LBS AT 110 PSI
	KG SINGLE	4080	4280	4480	4680	4880	5000	5240	5420	5600	S	2800 KG AT 760 kPa
	KG DUAL	7440	7800	8240	8520	8880	9200	9560	9880	10300	D	2575 KG AT 760 kPa

Note: Wheel listed first is the measuring wheel.
(1) Directional tread design.
(2) 3-Retread Manufacturing Limited Casing Warranty: 3 retreads or 700,000 miles or 7 years for MICHELIN® X® LINE™ ENERGY Z tires when retreaded by an authorized Michelin Retread Technologies (MRT) Dealer only. See limited warranty for details.
(*) Exceeding the lawful speed limit is neither recommended nor endorsed.
(‡) Overall widths will change 0.1 inch (2.5 mm) for each 1/4 inch change in wheel width. Minimum dual spacing should be adjusted accordingly.
MICHELIN® tires and tubes are subject to a continuous development program. Michelin North America, Inc. reserves the right to change product specifications at any time without notice or obligation.
Please consult wheel manufacturer's load and inflation limits. Never exceed wheel manufacturer's limits without permission of component manufacturer.

TREAD DESIGN

TREAD DESIGN

Tread designs can be categorized in two basic groups. The proper selection of a tread design will enable the user to maximize tread life. Selection will vary according to various vehicle differences and/or operational conditions. Tire tread mileage can be maximized or shortened depending on the tread design chosen.

RIB TREAD DESIGN:

- Characterized by grooves placed parallel to the bead, thus forming ribs, ranging in tread depths from 11/32nds to 23/32nds.
- Usually significantly better for fuel economy, although does not provide enhanced wet or snow traction.
- Usually found on the steering axle of a truck/tractor and on other free rolling axles such as trailers, dollies, tag and pusher axles.
- Also placed on torque axles when traction is not a high priority.

BLOCK OR LUG TREAD DESIGN:

- Characterized by grooves placed laterally and perpendicular to the bead, ranging from 14/32nds to 32/32nds.
- Selected primarily for traction and improved mileage.
- Usually found on the drive or torque axle.
- The increased tread depth is needed to offset the scrubbing and/or spinning that can occur when power is transmitted to the drive axle.

DIRECTIONAL TIRES

Truck tires featuring directional tread designs have arrows molded into the shoulder/edge of the outer ribs to indicate the intended direction of tire rotation. It is important, to maximize tire performance, that directional tires be mounted correctly on wheels to ensure that the directionality is respected when mounted on the vehicle.

For example, when mounting directional drive tires on a set of 8 wheels, use the drop centers as a reference. Four tires should be mounted with the arrows pointing to the left of the technician and four tires with the arrows pointing to the right. This ensures that when the assemblies are fitted onto the vehicle that all tires can be pointed in the desired direction of rotation.

Directional steer tires should be mounted in a similar fashion, one each direction, to ensure both are pointed forward.

Once directional tires are worn greater than 50%, there is generally no negative effect of running them in a direction opposite to the indicated direction of rotation.

Operating directional tires from new to 50% worn in the opposite direction of that indicated on the tire will result in the premature onset of irregular wear, excessive noise levels, and significantly reduced tread life.

MICHELIN® X LINE™ ENERGY Z Steer Tire

MICHELIN® X WORKS™ XDY® Drive Tire

MICHELIN® X ONE® MULTI™ ENERGY T Trailer Tire

Due to constant innovation and development, the types and sizes of MICHELIN® tires are always changing. For the most current product offerings, please also refer to the product line brochures, the price lists, the applications data books, and the websites: www.michelintruck.com, www.michelinrvtires.com, www.michelinearthmover.com.

DEFINITIONS

DOT SIDEWALL MARKINGS

All new tires sold in North America for use on Public Highways must have a DOT (Department of Transportation) number molded into the lower sidewall. This certifies compliance with Federal Regulations. All retreaded tires must also have an additional DOT number affixed to their sidewalls as well. It is recommended that this marking be placed in the lower sidewall near the original DOT code. Certain states may require labeling in addition to the Federal regulations certifying compliance with the Industry Standard for Retreading. The first 2 characters on an original tire code indicate the factory that manufactured the tire while the first 4 letters on a retread indicate the dealer who manufactured the retread. Production dates are indicated by the last 3 or 4 digits of this marking. Tires made or retreaded prior to the year 2000 used 3 digits, the first two numbers indicating the week and the last one indicating the year of production, followed by a solid triangle to indicate the 1990's. Tires made or retreaded after the year 1999 will have a 4 digit code: the first 2 indicate the week and the last 2 indicate the year of manufacture.

Example: DOT B6 D0 02D X 1614
New tire markings required by the DOT (Department of Transportation):

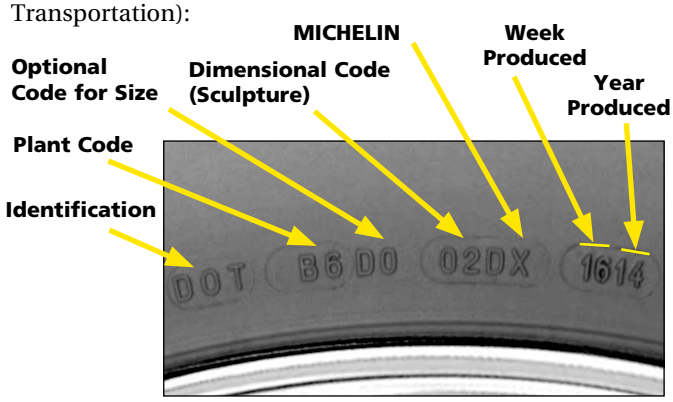

LOADS PER AXLE AND INFLATION PRESSURES

The carrying capacity of each tire size is tabulated for various inflation pressures by individual tire load and by axle load for single applications (2 tires) and dual applications (4 tires). Due to the effects of load distribution and road inclination, the four tires in dual may not equally share the axle load. Therefore, to protect the tire carrying the largest share of the load, the capacity for duals is not twice the capacity for a single formation, but is usually between 5 and 13% less depending on tire size. Ensure that the pressure between the dual tires and/or tires on the same axle does not differ by more than 5 psi. Also ensure tires run in dual are within 1/4 inch diameter to help achieve equal loading.

All trucks should be weighed, fully loaded, on a scale (not to exceed the GAWR - Gross Axle Weight Rating). Each axle, front and rear, must be weighed separately. Actual gross axle weights should be compared with the load and inflation tables to determine the inflation pressure required. The load carried by each individual front axle tire should be noted.

Due to uneven loading, motorhomes should be weighed by wheel end. The inflation pressure recommended must be capable of supporting the weighed values. Therefore, the maximum wheel end weight for the axle must be used. The maximum axle weight is determined by taking the highest wheel end value and multiplying by 2 for single applications and 4 for dual applications.

If the maximum load-carrying capacity of the tire is below the actual scale weight, then tires with greater carrying capacity should be used. This means either a tire with a higher load range or ply rating, or a larger tire size.

If the maximum load can be carried by the minimum pressure (as listed on the Load Inflation Chart), then a smaller size tire or a lower ply rated tire should be considered depending on the application and operation of the vehicle.

Never reduce tire pressure below minimum data book specification without consulting Michelin.

Ambient temperature will affect the pressure within the tire. For every 10-degree temperature change, pressure readings will change between 1 and 2 pounds per square inch (psi). Consider this when checking pressures. Check all tires when cold at least 3 hours after the vehicle has stopped. **Never bleed tire pressure from hot tires.**

Additionally, altitude can have a slight affect on pressure. For every 1,000 foot increase in altitude above sea level, pressure will increase approximately 1/2 psi. For example, a tire inflated to 100 psi at sea level will read slightly over 102 psi in Denver, Colorado.

See Cold Climate Pressure Correction Data (Page 169) or consult with Michelin for additional information on cold and hot climate corrections.

WHEELS

The correct wheels for each tire size are indicated in the specification tables. For complete tire specifications, refer to application specific data books.

MAXIMUM SPEED RESTRICTIONS*

Truck tires should normally be inflated according to the specification tables. The carrying capacities and inflation pressures specified in these tables are determined with the tire's rated maximum speed in consideration. (See specification tables for each tire's rated speed in the current MICHELIN® Truck Tire Data Book - MWL40731.) This is a maximum continuous speed, not an absolute upper limit.

Reducing the maximum speed at which the tire will operate and adjusting inflation pressures according to the information contained in the following chart can help increase the carrying capacity. To use the Low Speed and Static Coefficient Chart (Page 11) you must know the tire size (standard conventional size example - 11R22.5 or low profile 275/80R22.5) and the maximum speed rating of that tire. Speed ratings can be found in the data book or www.michelintruck.com. Based on the size and speed rating, select the correct quadrant (Table A or B), find the speed value desired, and multiply the tire load capacity by the coefficient provided. Also, add the listed increase in pressure (if any) to the pressure value for the selected tire shown in the data book. Give special attention to the wheel and vehicle axle ratings that may be exceeded by the increases in load and pressure. Tires optimized for highway applications have a maximum speed of 75 mph*.

These limits apply only to Light Truck and Truck tires, but do not include Special Application tires, tires for high cube vans, low bed trailers, urban, and on/off-road use.

The tires with "Y" or "L" (see Page 3) as the third character in the tread designations are designed and optimized for on/off-road applications and are speed restricted. These tires should not be used in applications that operate the tires continuously on highways over an extended period of time or at speeds that exceed the speed rating of the tire. This could lead to heat build up and cause premature or sudden tire failure as shown in this photo.

Exceeding speed rating for on/off road tires may cause premature or sudden tire failure.

Tires with the "Y" designation are for applications expected to be 80% on-road use and 20% off-road use. They have a maximum speed of 65 mph*. Tires with the "L" designation are for applications expected to be 20% on-road use and 80% off-road use.

Some of the "L" designated tires have a maximum speed of 50 mph while others have maximum speeds of 55, 60, and 70 mph*. There is no speed restriction once the casing has been retreaded per the USTMA (U. S. Tire Manufacturers Association) and the TMC (Technology & Maintenance Council).

The Tire and Rim Association, Inc. (TRA) permits operating a 65 mph* rated tire at higher speeds with a reduced load and increased inflation. No such permission is granted by TRA for tires with speed ratings below 65 mph*.

* Exceeding the legal speed limit is neither recommended nor endorsed.

STATIC AND LOW SPEED LOAD AND PRESSURE COEFFICIENTS

⚠WARNING

Never exceed the maximum load or pressure limits of the wheel. Exceeding the wheel limits can lead to component failure, serious accident, injury or death.

TRA (THE TIRE AND RIM ASSOCIATION, INC.) STANDARDS

(These tables apply to tires only. Consult wheel manufacturer for wheel load and inflation capacities.)

Load limits at various speeds for radial ply truck-bus tires used on improved surfaces. (1)

A. METRIC AND WIDE BASE TIRES

The service load and minimum (cold) inflation must comply with the following limitations unless a speed restriction is indicated on the tire.*

Speed Range (mph)	% Load Change	Inflation Pressure Change
41 thru 50	+7%	No increase
31 thru 40	+9%	No increase
21 thru 30	+12%	+10 psi
11 thru 20	+17%	+15 psi
6 thru 10	+25%	+20 psi
2.6 thru 5	+45%	+20 psi
Creep thru 2.5	+55%	+20 psi
Creep (2)	+75%	+30 psi
Stationary	+105%	+30 psi

B. CONVENTIONAL TIRES

The service load and minimum (cold) inflation must comply with the following limitations unless a speed restriction is indicated on the tire.*

Speed Range (mph)	% Load Change	Inflation Pressure Change
41 thru 50	+9%	No increase
31 thru 40	+16%	No increase
21 thru 30	+24%	+10 psi
11 thru 20	+32%	+15 psi
6 thru 10 (2)	+60%	+30 psi
2.6 thru 5 (2)	+85%	+30 psi
Creep thru 2.5 (2)	+115%	+30 psi
Creep (2) (3)	+140%	+40 psi
Stationary (2)	+185%	+40 psi

Note: For bias ply tires please consult the TRA Year Book.

(1) These load and inflation changes are only required when exceeding the tire manufacturer's rated speed for the tire.
(2) Apply these increases to Dual Loads and Inflation Pressures.
(3) Creep – Motion for not over 200 feet in a 30-minute period.

Note 1: The inflation pressures shown in the referenced tables are minimum cold pressures for the various loads listed.
Higher pressures should be used as follows:
A. When required by the above speed/load table.
B. When higher pressures are desirable to obtain improved operating performance.
For speeds above 20 mph, the combined increases of A and B should not exceed 20 psi above the inflation specified for the maximum load of the tire.

Note 2: Load limits at various speeds for:
Tires used in highway service at restricted speed.
Mining and logging tires used in intermittent highway service

***Exceeding the legal speed limit is neither recommended or endorsed.**

To determine the proper load/inflation table, always comply with the markings on the tire sidewall for maximum load at cold pressure.

Load and inflation industry standards are in a constant state of change. Michelin continually updates its product information to reflect these changes. Therefore, printed material may not reflect the current load and inflation information.

NOTE: Never exceed the wheel manufacturer's maximum pressure limitation.

S = Single configuration – 2 tires per axle. D = Dual configuration – 4 tires per axle. Loads are indicated per axle.

TECHNICAL SPECIFICATIONS FOR MICHELIN 455/55R22.5 LRM ON 13.00x22.5 WHEELS STEER AXLE, FIRST LIFE ONLY

Dimension	Load Range	Loaded Radius		RPM	Max. Load Single*			
		in.	mm.		lbs.	psi	kg.	kPa
455/55R22.5	LRM	19.5	496	493	10000	120	4535	830

Dimension	Load Range	psi	75	80	85	90	95	100	105	110	115	120
		kPa	520	550	590	620	660	690	720	760	790	830
455/55R22.5 **13.00" Wheel**	LRM	lbs. per axle	13740	14460	15180	15880	16600	17280	17980	18660	19340	20000
		kg. per axle	6240	6520	6900	7180	7560	7820	8100	8460	8720	9070

* Note: When used on a 13.00" wheel the max load and pressure is lower than that indicated on the sidewall.

TRUCK TYPE BY WEIGHT CLASS

CLASS 1 6,000 lbs. GVW and less	CLASS 2 6,001 to 10,000 lbs. GVW	CLASS 3 10,001 to 14,000 lbs. GVW	CLASS 4 14,001 to 16,000 lbs. GVW	CLASS 5 16,001 to 19,500 lbs. GVW
 MILK/BREAD	 MILK/BREAD	 MILK/BREAD	 CONVENTIONAL VAN	 RACK
 UTILITY VAN	 UTILITY VAN	 WALK-IN VAN	 LARGE WALK-IN	 LARGE WALK-IN
 PICK-UP	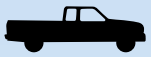 FULL SIZE PICK-UP	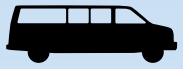 LARGE VAN	 CITY DELIVERY	 BUCKET
 FULL SIZE PICK-UP	 CREW CAB PICK-UP			 TREE SPECIALIST
 COMPACT VAN	 COMPACT VAN			 BOTTLED GAS
 SUV	 LARGE SUV			
 STEP VAN	 STEP VAN			
	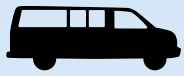 CREW VAN			
	 MINI BUS			

CLASS 6 19,501 to 26,000 lbs. GVW	CLASS 7 26,001 to 33,000 lbs. GVW	CLASS 8 33,001 lbs. and over	TRAILER Weight: Not specified	NOTES
 TOW FURNITURE 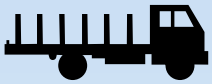 STAKE COE VAN SCHOOL BUS SINGLE AXLE VAN 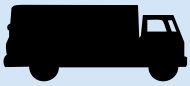 BOTTLER LOW PROFILE COE	 HOME FUEL TRASH 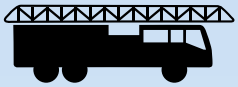 FIRE ENGINE 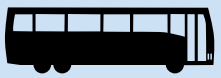 SIGHTSEEING BUS TRANSIT BUS 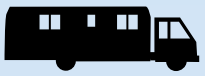 RV GCW TO 65,000 HIGH PROFILE COE MEDIUM CONVENTIONAL	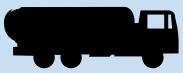 FUEL DUMP CEMENT 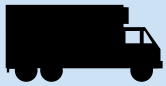 REEFER TANDEM AXLE VAN 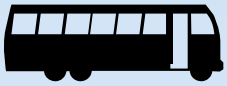 INTERCITY BUS LARGE RV 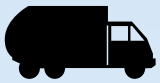 TANDEM REFUSE GCW TO 80,000 LOW PROFILE TANDEM COE HEAVY CONVENTIONAL HEAVY TANDEM CONVENTIONAL HEAVY TANDEM CONVENTIONAL SLEEPER	 DRY VAN DOUBLES LIQUID TANK DRY BULK LOGGER PLATFORM 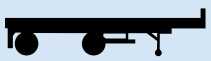 SPREAD AXLE DROP FRAME DUMP REEFER DEEP DROP 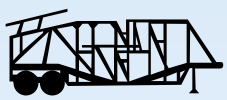 AUTO TRANSPORTER 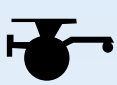 DOLLY	**GVW – Gross Vehicle Weight** The total weight of the loaded vehicle includes chassis, body, and payload. **GCW – Gross Combination Weight** Total weight of loaded tractor-trailer combination includes tractor-trailer and payloads. **GAWR – Gross Axle Weight Rating** Maximum allowable load weight for a specific spindle, axle, and wheel combination. Identical vehicles may appear in different vehicle weight classes. This is because of a difference in the components installed in each vehicle such as engines, transmissions, rear axles, and even tires that are not readily discernible in the external appearance of those particular vehicles.

SECTION TWO

Selecting the Wheel

Section Two

Selecting a Wheel 15-26

WHEEL SYSTEMS **16-21**

- Steel vs Aluminum
- Special Considerations for Aluminum Wheels
- Special Fasteners
- Wheel Type
  - – Hub Piloted Wheels
  - – Stud Piloted Wheels
  - – Cast Spoke Wheels
- Torque
- Disc Wheel Installation Procedure – Recommended Mounting Torque for Disc Wheel

SELECTING A WHEEL **22**

- Outset/Inset
- Use of Outset Wheel with MICHELIN® X One® Tires
- Drop Center

VALVE SYSTEMS **23-25**

- Loose and Leaky Valve Stems
- Proper Fasteners for MICHELIN® X One® Tires on Stud Piloted Wheels

WHEEL SPECIFICATIONS **26**

WHEEL SYSTEMS

Before servicing any truck wheel, it is essential to know the type of mounting system you will be working on. Three basic types of mounting systems are commonly used on commercial vehicles in North America. See *TMC RP 217D, Attaching Hardware for Disc Wheels*, for more detailed information on fasteners. Refer to Page 25 for proper fasteners and procedures for MICHELIN® X One® tire fitments.

STEEL VS ALUMINUM

Depending on the vehicle's vocation, a customer may choose steel wheels over aluminum. However, a 14.00 x 22.5" aluminum wheel is up to 68 lbs. lighter than its steel counterpart. Due to the larger drop center of the aluminum wheel, it is typically easier to mount the MICHELIN® X One® tire on aluminum wheels.

SPECIAL CONSIDERATIONS FOR ALUMINUM WHEELS

It is also important to note that the disc thickness of aluminum wheels is usually much thicker than steel wheels, and stud length must be checked when changing from steel wheels to aluminum wheels. Aluminum wheel disc thickness ranges from 3/4" to 1-1/8". This is approximately double the thickness of steel disc wheels. Because of this increase in disc thickness, special consideration must be given to aluminum wheel attaching hardware. Wheel stud lengths are specifically designed to suit varying disc wheel mounting systems, brake drum mounting face thickness, and disc wheel material types. Failure to use the correct length studs may lead to insufficient clamp load of the disc wheels.

The minimum length for dual aluminum wheels is 1.06 inches or 27 mm as measured from the brake drum face when mounted on the hub. The pilot must engage 1/2 of the thickness of the aluminum wheel. Refer to *TMC RP 217D, Attaching Hardware for Disc Wheels*. Hub Bore and 15 degree bead seat measuring tools are available from the wheel manufacturers. (Figure 1)

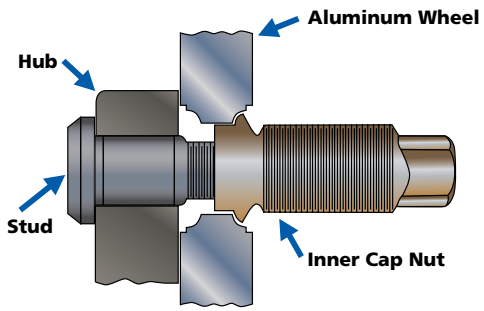

Figure 1: Correct

An out-of-service condition exists if the area between the bolt hole ball seats is worn away to less than 1/16th inch (the approximate thickness of a dime). If this is the case, the wheel should be scrapped. (Figure 2)

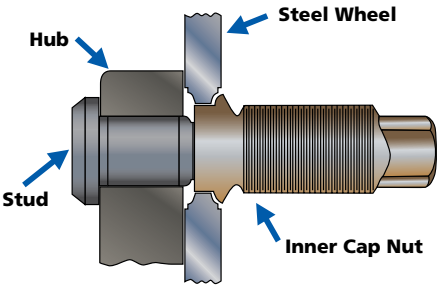

Figure 2: Incorrect

SPECIAL FASTENERS

It is necessary to order "cap nuts" to replace the inner and outer nuts that are used when mounting a traditional stud piloted dual assembly. These parts can be ordered from a wheel distributor in your area. The part numbers are listed on Page 25. A 50/50 split of left and right hand threads will be required.

⚠WARNING

Do not use the 5995 nut on steel stud piloted wheels, as the shoulder will protrude past the disc face preventing proper installation and safe operation.

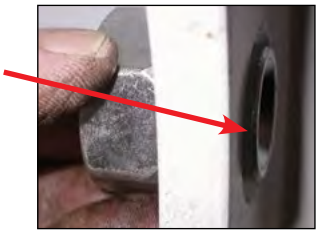

From left to right: Aluminum MICHELIN® X One® tire fastener, steel or aluminum MICHELIN® X One® tire fastener, and steel MICHELIN® X One® tire fastener. See application chart on Page 25 for part numbers and more information.

WHEEL TYPE

Hub Piloted Disc Wheels

Both aluminum and steel wheels are currently available in hub piloted configuration. Hub Piloted Disc Wheels are designed to center on the hub at the center hole or bore of the wheel. The wheel center hole locates the wheel on pilots built into the hub. Hub piloted wheels are used with two-piece flange nuts, which contact the disc face around the bolt hole. Only one nut on each stud is used to fasten single or dual wheels to a vehicle. All stud and nut threads are right hand. Hub piloted wheels have straight through bolt holes with no ball seat, which provides a visual way of identifying them.

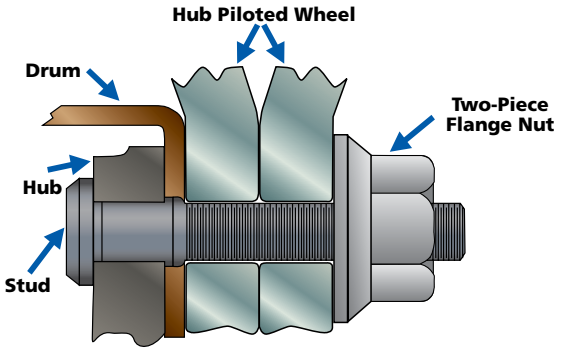

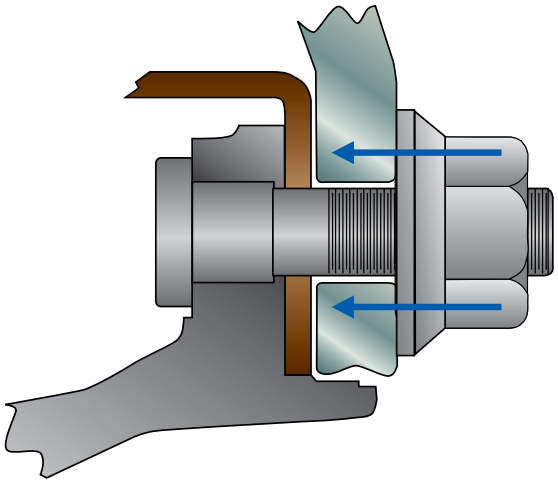

Stud Piloted Disc Wheels

There are aluminum and steel wheels with 2” outset currently available in stud piloted configuration. Stud Piloted Disc Wheels are designed to be centered by the nuts on the studs. The seating action of the ball seat nuts in the ball seat bolt holes centers the wheels. Stud piloted dual wheels require inner and outer cap nuts. Fasteners with left hand threads are used on the left side of the vehicle and those with right hand threads are used on the right side of the vehicle.

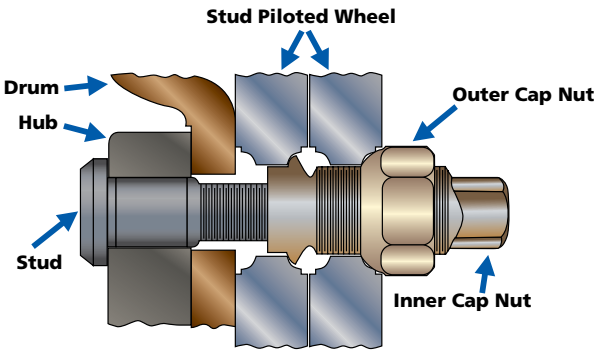

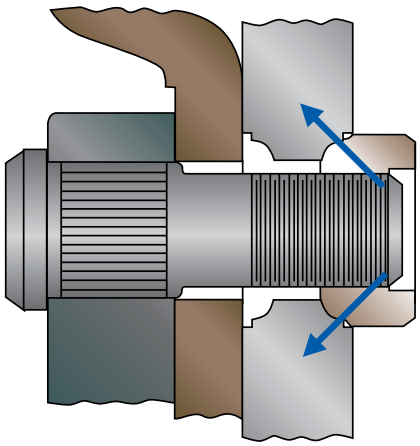

Cast Spoke Wheels

Cast Spoke Wheels consist of a metal casting that includes the hub with spokes, either 3, 5, or 6. Demountable rims are attached to this axle component with clamps. Each cast spoke wheel requires specific clamps designed for that wheel. The cast spoke wheel with brake drum and clamps for rear axles requires a spacer band to hold the two rims apart and provides for proper dual spacing. Proper torque is 210-260 lb/ft.

5 Spoke
Cast Spoke Wheel
With Brake Drum and Clamps
for Rear Axles

5 Spoke
Cast Spoke Wheel With Clamps,
Without Brake Drum
for Front Axles

NOTICE **Correct components must be used.**

It is important to note that some hub piloted and stud piloted wheels may have the same bolt circle pattern. Therefore, they could mistakenly be interchanged. Each mounting system requires its correct mating parts. It is important that the proper components are used for each type of mounting and that the wheels are fitted to the proper hubs.

If hub piloted wheel components (hubs, wheels, fasteners) are mixed with stud piloted wheel components, loss of torque, broken studs, cracked wheels, and possible wheel loss can occur since these parts are not designed to work together.

Mixing hub piloted and stud piloted wheels will not allow the inner cap nut to fit into the inner wheel and will result in the inner cap nut interfering with the outer wheel. (Figure 1)

⚠WARNING

Never mix components from different wheel systems. Doing so can lead to component failure, accident, serious injury or death.

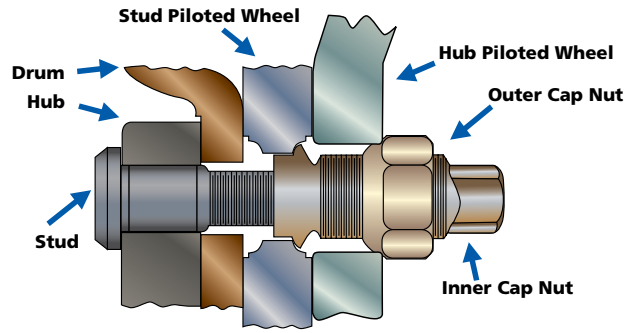

Figure 1: Improper Mounting

Ball seat, stud piloted wheels should not be used with flange nuts because they have larger bolt holes and do not have sufficient area near the bolt hole to support the flange nut. Slippage may occur. Also the center hole is too large to center the wheel. (Figure 2)

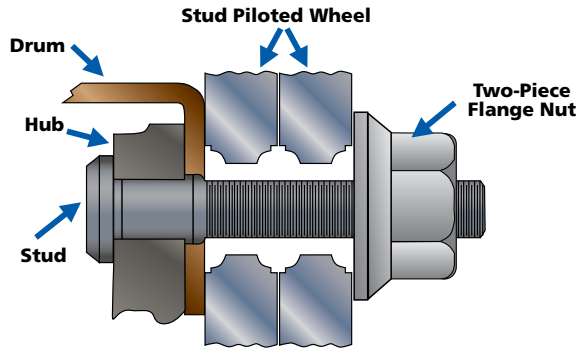

Figure 2: Improper Mounting

It is important to note that some hub piloted and stud piloted wheels may have the same bolt circle pattern. Therefore, they could mistakenly be interchanged. Each mounting system requires the correct mating parts. It is important that the proper components are used for each type of mounting and that the wheel is fitted to the proper hub.

If hub piloted wheel components (hubs, wheels, and fasteners) are mixed with stud piloted wheel components, loss of torque, broken studs, cracked wheels, and possible wheel loss can occur, which can lead to injury or death. These parts are not designed to be interchangeable. Refer to *TMC RP 217D, Attaching Hardware for Disc Wheels*, and *TMC RP 608B, Brake Drums and Rotors*.

NOTE: Some states and provinces have laws that dictate sufficient thread engagement or thread engagement past the nut body. Make sure you know the laws for the states and provinces in which you operate and comply.

TORQUE

Stud piloted, ball seat mounting system:

Left hand threads are used on the left side of the vehicle. Right hand threads are used on the right side of the vehicle. Tighten the nuts to 50 foot-pounds using the sequence shown. Check that the wheel is properly positioned, then tighten to recommended torque using the sequence shown. It is recommended that studs and nuts on a stud piloted mounting system should be free of rust and debris. They should then be torqued "dry" to 450-500 foot-pounds. After 50 to 100 miles of operation, torque should be rechecked.

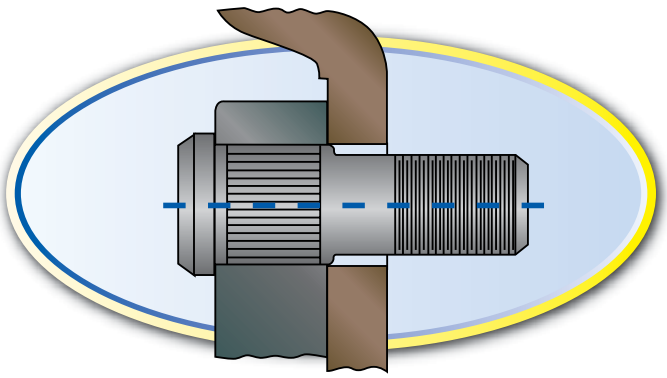

Hub piloted mounting system:

Most North American manufacturers of highway trucks, tractors and trailers, which incorporate the hub piloted wheel mounting system, require wheel studs and 2-piece flange nuts with metric threads. Most frequently these are M22 x 1.5. Before installing 2-piece flange nuts apply 2 drops of SAE (Society of Automotive Engineers) 30W oil to the last 2 or 3 threads at the end of each stud and 2 drops to a point between the nuts and flanges. This will help ensure that the proper clamping force is achieved when final torque is reached. Lubrication is not necessary with new hardware. To aid in installation and removal of aluminum wheels, some wheel manufacturers recommend lubricating the hub bore and/or pilot pads. Check with your wheel manufacturer for additional direction.

Note: When retrofitting a dual equipped tractor with steel wheels to an aluminum wheel with MICHELIN® X One® tire, it may be necessary to install longer studs to obtain proper thread engagement of the nut. This is due to the aluminum wheel's disc face being approximately 1/4" thicker than two steel wheels in dual.

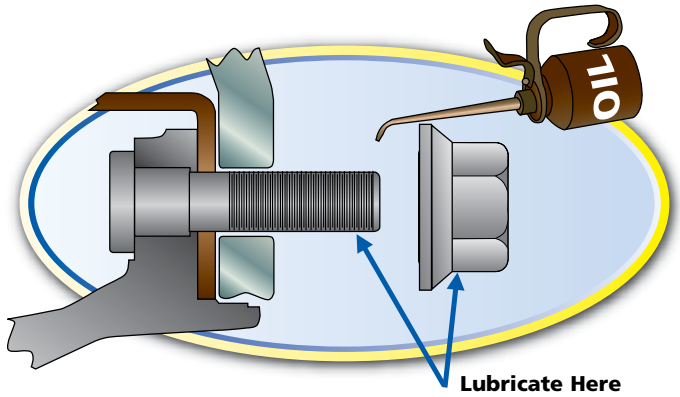

Torque Sequence:

Both stud piloted and hub piloted wheel systems use the same torque sequence. Tighten the flange nuts to 50 foot-pounds using the sequence shown. Check the disc wheel for positioning on the pilots and proper seating against the drum face. Tighten to 450 to 500 foot-pounds using sequence shown. After 50 to 100 miles of operation, torque should be rechecked.

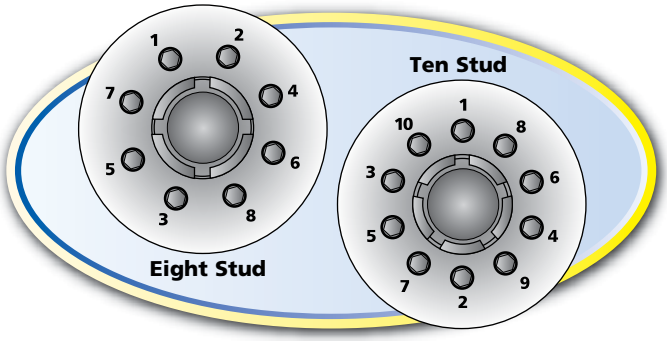

DISC WHEEL INSTALLATION PROCEDURE— RECOMMENDED MOUNTING TORQUE FOR DISC WHEELS

Mounting Type	Nut Tread	Torque Level Ft-Lb (Oiled)
Hub piloted with flange nut	11/16"–16	300-400
	M20 x 1.5	280-330
	M22 x 1.5	450-500
	7/8"–14	350-400
		Ft-Lb (Dry)
Stud piloted, double cap nut Standard type (7/8" radius)	3/4"–16	450-500
	1-1/8"–16	450-500
Stud piloted, double cap nut Heavy duty type (1-3/16" radius)	15/16"–12	750-900
	1-1/8"–16	750-900
	1-5/16"–12	750-900

Notes:

1. If using specialty fasteners, consult the manufacturer for recommended torque levels.
2. Tightening wheel nuts to their specified torque is extremely important. Under-tightening, which results in loose wheels, can damage wheels, studs, and hubs and can result in wheel loss. Over-tightening can damage studs, nuts, and wheels and result in loose wheels as well.
3. Regardless of the torque method used, all torque wrenches, air wrenches and any other tools should be calibrated periodically to ensure the proper torque is applied.

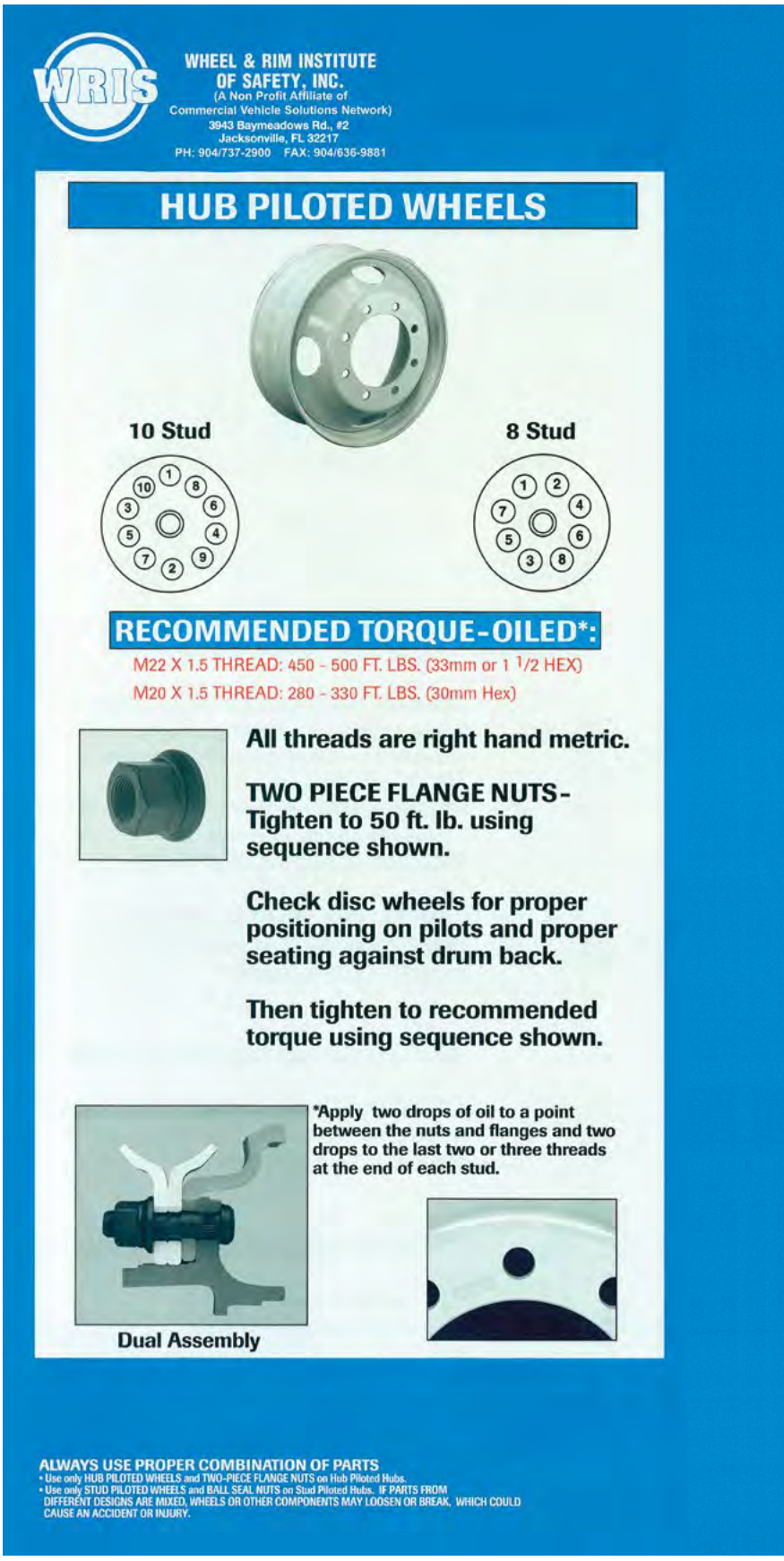

Reprinted with permission from *TMC RP 222C, User's Guide to Wheels and Rims*, published by the Technology & Maintenance Council (TMC) of the American Trucking Associations, 2200 Mill Road, Alexandria, VA 22314 (703) 838-1776.

HEAVY & MEDIUM TRUCK AND TRAILER
TORQUE SPECIFICATIONS
FOR BOTH STEEL AND ALUMINUM WHEELS

IMPORTANT: Federal OSHA regulations require all employers to make sure their employees who service rims/wheels understand the proper safety information contained in Regulation 29 CFR Part 1910.177. Do not let your employees service rims/wheels unless they are thoroughly trained and comply with this Regulation.

STUD PILOTED WHEELS

10 Stud

6 Stud

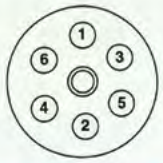

RECOMMENDED TORQUE-DRY:

3/4 - 16 THREAD: 450 - 500 FT. LBS.
1 1/8 - 16 THREAD: 450 - 500 FT. LBS.
15/16 - 12 THREAD: 750 - 900 FT. LBS.
1 5/16 - 12 THREAD: 750 - 900 FT. LBS.

Left-hand threads are used on the left side of the vehicle. Right-hand threads are used on the right side of the vehicle.

INNER CAP NUTS – Tighten Cap Nuts to 50 ft. lb. using sequence shown. Then tighten Cap Nuts to recommended torque.

OUTER CAP NUTS – Tighten Cap Nuts to 50 ft. lb. using sequence shown. Then tighten Cap Nuts to recommended torque.

Dual Assembly

NOTE: In all applications where an Aluminum Inner Wheel is to be installed, a special Inner Cap Nut *must* be substituted for the Standard Inner Cap Nut.

DEMOUNTABLE RIMS

3 Spoke

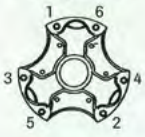

5 Spoke

6 Spoke

RECOMMENDED TORQUE-DRY:

3/4 - 10 Thread: 200 - 260 FT. LBS.

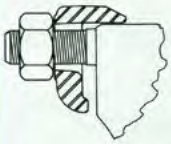

REAR HEEL TYPE CLAMP-Gap permissible but not required – if gap exceeds 1/4" or if clamp bottoms out before reaching 80% of recommended torque, check to ensure that proper clamps and spacer are being used.

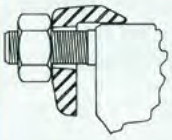

REAR HEEL-LESS CLAMP – Gap is required. Maximum 3/8" to 1/2".

Heel of clamp does not touch wheel.

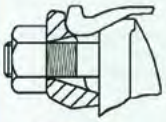

FRONT HEEL TYPE CLAMP – Gap is not permitted. Clamp must bottom against spoke.

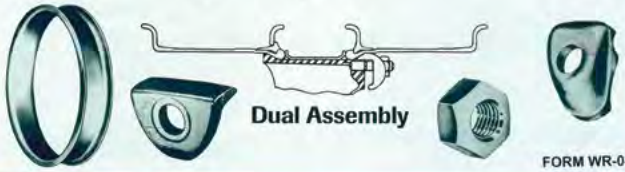

Dual Assembly

FORM WR-0404

RECHECK TORQUE AFTER FIRST 50 TO 100 MILES OF SERVICE.

After a wheel has been installed, recheck the torque level between 50 and 100 miles of operation and retighten if necessary to the recommended torque using the proper sequence. (For stud mount dual applications loosen the outer cap nut before retorquing the inner cap nut). It is recommended that a torque check be made as part of a vehicle's scheduled maintenance program or at 10,000 mile intervals whichever comes first. Individual fleet experience may dictate shorter intervals or allow longer intervals.

NOTE: THESE INSTRUCTIONS ARE NOT COMPLETE. FOR MORE DETAILED INFORMATION ABOUT WHEEL INSTALLATION AND MAINTENANCE, SEE MANUFACTURER'S MANUAL, *CVSN'S WHEEL AND RIM MANUAL*, or *USER'S GUIDE TO WHEELS AND RIMS* by THE MAINTENANCE COUNCIL.

WRIS would like to acknowledge and thank the following companies for their support and assistance in development of this safety information: ACCURIDE CORPORATION ALCOA WHEEL PRODUCTS INTERNATIONAL • HAYES LEMMERZ INTERNATIONAL

Use with permission from WRIS - Wheel & Rim institute of Safety, Inc.

SELECTING A WHEEL

OFFSET/INSET

Offset: The lateral distance from the wheel centerline to the mounting surface of the disc.

Outset: *Outset* places the wheel centerline outboard of the mounting (hub face) surface.

Inset: The *Inset* places the wheel centerline inboard of the mounting (hub face) surface or over the axle.

USE OF OUTSET WHEELS WITH MICHELIN® X ONE® TIRES

Some axle and hub manufacturers have recently clarified and confirmed their position concerning the use of such wheels with their respective components. Historically the position of the component manufacturers is not totally consistent, the majority view concerning the retrofit of duals with MICHELIN® X One® tires can be summarized as follows:

Axle Type*	Spindle Type	Wheel Recommendation
Drive axles	"R"	0" to 2" outset wheels**
Trailer axles	"P"	2" outset wheels
Trailer axles	"N"	Check with component manufacturer

* Many other axle and spindle combinations exist. Contact axle manufacturer.
** Contact axle manufacturer before retrofitting 2" outset wheels.

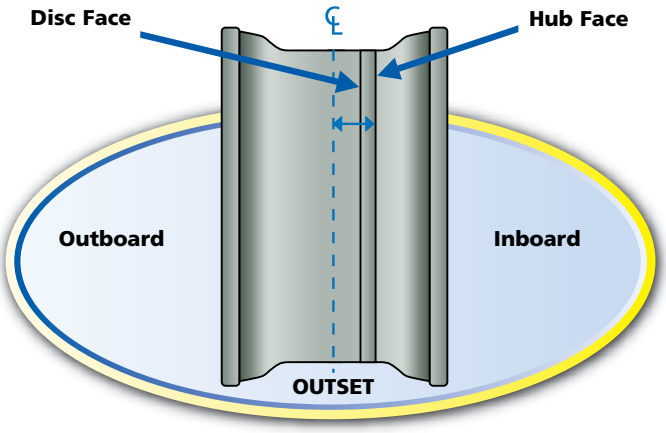

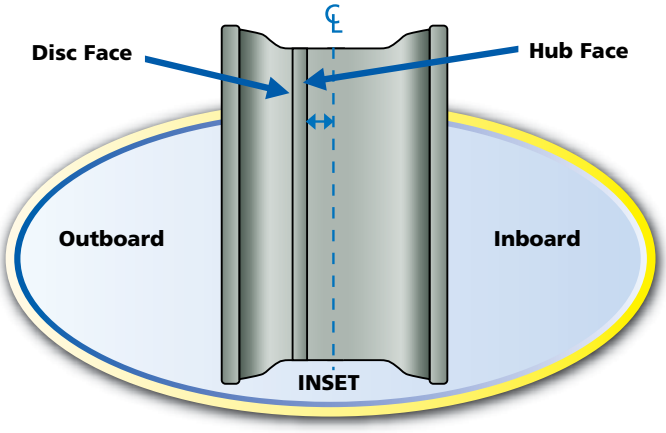

Truck and trailer manufacturers may have different specifications. For optimum track width, stability, and payload, end-users should talk to their trailer suppliers about the use of 83.5" axles with zero outset wheels.

End-users that have retrofitted vehicles with 2" outset wheels should contact their respective vehicle, axle, or component manufacturers for specific application approvals or maintenance recommendations.

NOTE: Use of outset wheels may change Gross Axle Weight Rating (GAWR). Consult vehicle and component manufacturer.

DROP CENTER

The Drop Center is the well or center portion of the wheel. This is what allows the tire to be easily mounted on a single piece wheel: the tire bead will "drop" into this cavity.

The 14.00 x 22.5" (15-degree bead seat) drop center tubeless wheel required for the MICHELIN® X One® tire has differently styled drop centers depending on the manufacturer.

Accuride® aluminum and steel wheels as well as Hayes Lemmerz® steel wheels are produced with a narrow ledge on one side and a long tapered ledge on the other (See Page 26). The narrow ledge is necessary to ease the mounting and dismounting process.

The Alcoa aluminum wheel is manufactured with a narrow ledge on either side. This allows it to be mounted and dismounted from either side.

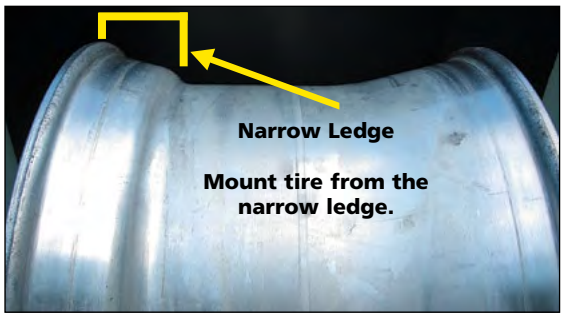

Accuride

NOTICE **Always ensure the narrow ledge is up when mounting or demounting.**

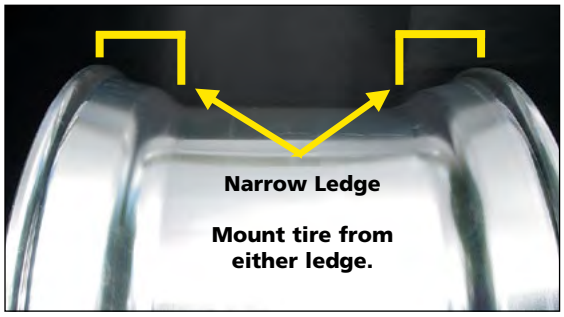

Alcoa

VALVE SYSTEMS

Always replace the whole valve assembly when a new tire is mounted.

Ensure the valve stem is installed using the proper torque value: 80 to 125 in/lbs (7 to 11 ft/lbs) for aluminum wheels and 35 to 55 in/lbs (3 to 5 ft/lbs) for tubeless steel wheels.

When an aluminum wheel is used in the outset position, TR553E valve degree bend should be used. This valve has a 75-degree bend that facilitates taking pressures. If the valve stem is installed on the inboard side of the wheel, ensure proper clearance exists between the brake drum and the valve stem. It is highly recommended that the older style valve stems TR543E be replaced with the newer style TR553E to minimize corrosion build-up, thereby minimizing stem leaks.

TR553E Valve (left) and TR543E (right)

When installed in the inset position, the longer TR545E valve is required.

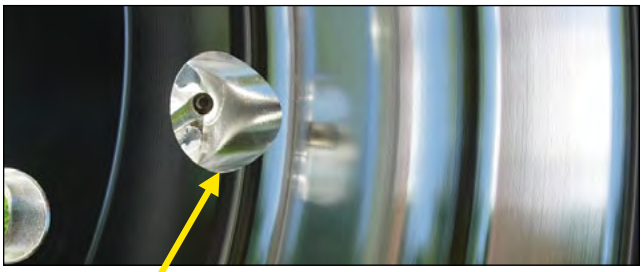

TR545E Valve

If the operator uses the wheel as a step when securing the load, a straight TR542 valve may be preferable. An angle head pressure gauge will be required to check pressure, but it may still be difficult due to interference with the hub.

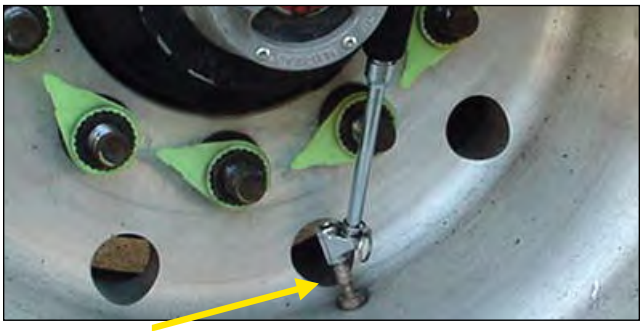

TR542 Valve

Per *TMC RP 234A, Proper Valve Hardware Selection Guidelines* it is recommended that an anti-corrosive or dielectric compound be used on the valve stem threads and O-rings prior to installation. This will prevent corrosion from growing around the O-ring, which squeezes it and causes leaks. Check with your aluminum wheel manufacturer or valve stem supplier for their recommendation of an anti-corrosive compound.

Corrosion Related Leak at the Base of the Wheel

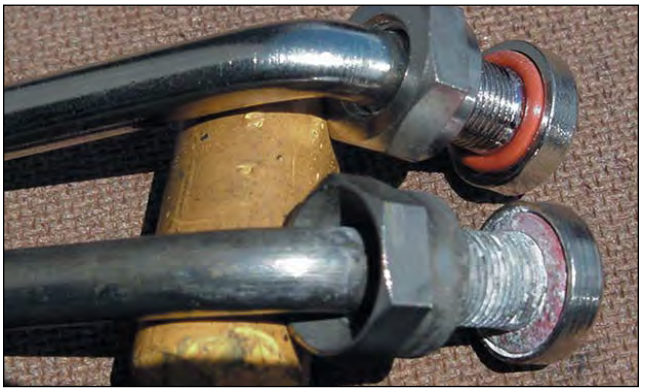

Note Corrosion On Bottom Valve

LOOSE AND LEAKY VALVE STEMS

Whether they are new or have been in use over a period of time, valve stems can become loose. It is recommended that you verify torque on all wheels put into service. When installed, they should be torqued, using the proper tool at 80 to 125 in/lbs (7 to 11 ft/lbs) for aluminum wheels and 35 to 55 in/lbs (3 to 5 ft/lbs) for steel wheels.

Checking for loose and leaky valve stems should be made a part of your regular maintenance schedule.

Methods for checking for loose valve stems:
- check by hand to see if the valve nut is loose
- spray a soapy solution on the valve to see if there is a leak
- check with a torque wrench

To protect the valve from dirt and moisture, a heat resistant metal valve cap with a rubber seal must be installed. The number one cause of tire pressure loss in tires can be attributed to missing valve caps.

To facilitate pressure maintenance, a dual seal metal flow through cap may be used instead of a valve cap. These should be installed hand tight only to prevent damaging the seal (1.5 - 3 in/lbs).

Valve Cap With Rubber Seal

Dual Seal Metal Flow-Through Cap

Corrosion-Related Leak at the Base of the Wheel

PROPER FASTENERS FOR MICHELIN® X ONE® TIRES ON STUD PILOTED WHEELS

It is important that the proper fasteners be used when mounting the MICHELIN® X One® tire on stud piloted wheels. If a fastener specified for the stud piloted aluminum wheel is used on a steel wheel, it will bottom out on the brake drum, and the proper clamping force necessary to help ensure that the torque on the wheel remains constant will not be achieved, possibly resulting in a "wheel off" situation.

In the table below, the top fastener, Part No. 5554R&L is primarily for the Alcoa single mounted stud piloted aluminum wheel (example: 8.25 x 22.5") and 14.00 x 22.5" wide base stud piloted steel wheel. Part No. 5995R&L is for the Alcoa 14.00 x 22.5" wide base stud piloted aluminum wheel.

The last two fasteners Part No. 5652R&L for a 3/4"–16 studs and 5977R&L for a 1-1/8"–16 studs are specified for the 14.00 x 22.5" stud piloted steel wheel.

	Part No.	Replaces	Thread	Hex	High	Application and General Information
	5554R&L	Alcoa 5554R&L Budd 706 13/4	¾" – 16	1½"	1"	For Single Mounting of Alcoa Forged Aluminum Disc Wheels and Steel Stud Piloted Wide Single Wheels.
	5995R&L	Alcoa 5995R&L Webb 178950R 178951L	¾" – 16	1½"	1⅜"	For Alcoa Wide Base Aluminum Wheels – "Long Grip" Cap Nut. Larger height provides greater lug wrench contact with the wheel.
	5652R&L Zinc Dichromate Plating	Accuride NTL/NTR 25 Budd 37888/9 Gunite 2564/65 Motor Wheel 84523/24	¾" – 16	1½"	⅞"	Steel Wheel: Single Stud Mounting Front and Rear
	5977R&L Hardened Zinc Yellow Dichromate Plating	Alcoa 5977 R&L Accuride NTL/NTR 25 Alcoa 5552R&L Budd 37891/2	1⅛" – 16	1½"	⅞"	Single Large Stud Mounting Front and Rear

NOTE: The table provided is for reference only. Wheel specific questions should be directed to the wheel manufacturer.

WHEEL SPECIFICATIONS

14.00 x 22.5" – 15-DEGREE DROP CENTER WHEEL SPECIFICATIONS

Manufacturer	Material	Part No.	Finish	Weight (lbs.)	Outset	Inset	Max Load & Inflation
10-hole, stud located, ball seat mounting – 11.25 in. bolt hole circle							
Hayes Lemmerz	Steel	10070TW	White	125	2.00	1.49	11,000 @ 125
8-hole, hub piloted mounting – 10.827 in. bolt hole circle							
Alcoa	Aluminum	841472	Polished Outside	63	2.0	N/A	12,800@130
Alcoa	Aluminum	841477	Polished	63	2.0	N/A	12,800@130
10 Hole, 2" outset, hub piloted mounting – 285.75 mm bolt hole circle							
Alcoa	Aluminum	840627	Polished	58	2.0	N/A	12,800@130
Alcoa	Aluminum	840620DB	Machine Finished Dura-Bright®	58	2.0	N/A	12,800@130
Alcoa	Aluminum	840622	Polished Outside	58	2.0	N/A	12,800@130
Alcoa	Aluminum	840622DB	Polished Outside Dura-Bright®	58	2.0	N/A	12,800@130
Accuride	Aluminum	41660ANP	Machined	59	2.0	1.0	12,800@131
Accuride	Aluminum	41660XP	Polished	59	2.0	1.0	12,800@131
Accuride	Steel	29627	White	127	2.0	1.38	12,800@125
Hayes Lemmerz	Steel	10027TW	White	136	2.0	1.49	11,000@125
10 Hole, 0" outset, hub piloted mounting – 285.75 mm bolt hole circle							
Alcoa*	Aluminum	840607	Polished	58	0	-1.00	12,800@130
Alcoa*	Aluminum	840600DB	Machine Finished Dura-Bright®	58	0	-1.00	12,800@130
Alcoa*	Aluminum	840602	Polished Outside	58	0	-1.00	12,800@130
Alcoa*	Aluminum	840602DB	Polished Dura-Bright®	58	0	-1.00	12,800@130
Accuride*	Aluminum	41016ANP	Machined	59	0.50	0.50	12,800@131
Accuride*	Aluminum	410160XP	Polished	59	0.50	0.50	12,800@131
Accuride*	Steel	50172	White	127	0	N/A	12,800@125
Hayes Lemmerz	Steel	10027TW	White	136	0.51	0	12,300@120
10 Hole, 1.00" outset, hub piloted mounting – 285.75 mm bolt hole circle							
Alcoa	Aluminum	840601	Polished Outside	58	1.00	0	12,800@130
Alcoa	Aluminum	840601DB	Polished Outside Dura-Bright®	58	1.00	0	12,800@130
Alcoa	Aluminum	840608	Machine Finished	58	1.00	0	12,800@130
Alcoa	Aluminum	840609DB	Machine Finished Dura-Bright®	58	1.00	0	12,800@130

NOTE: Under no circumstances should a 12.25" wheel be used to fit a MICHELIN® X One® tire.
NOTE: The table provided is for reference only. Wheel specific questions should be directed to the wheel manufacturer.
***0" Outset Aluminum Wheels:** Alcoa uses the mounting face as the reference.
Accuride uses the center line as the reference. This means that an Accuride 0" outset wheel is listed as 0.50" outset wheel.
Alcoa at www.alcoawheels.com; Dura-Bright® is a registered trademark of Alcoa
Accuride at www.accuridecorp.com
Hayes Lemmerz at www.hayes-lemmerz.com

SECTION THREE

Mounting the Tire

Section Three

Mounting the Tire 27-48

WARNINGS **28-31**

- Zipper Ruptures
- Tire Inspection
- Selection of Proper Components and Materials
- Inflation Safety Recommendations
- Tire and Wheel Lubrication
- Preparation of Wheels and Tires

GENERAL INSTRUCTIONS FOR TUBELESS TIRE MOUNTING/DEMOUNTING **32-33**

- Tubeless Tire Mounting/Demounting Using a Mounting Machine

TUBELESS TIRE MOUNTING/DEMOUNTING **34-42**

- Mounting Tubeless
- 19.5" Aluminum Wheels
- 19.5" Steel Wheels
- Special Tools / Mounting MICHELIN® X One® Tires
- Inflation of Tubeless Tires
- Demounting of Tubeless Tires

MISMOUNT **43-44**

- Three Easy Steps to Help Minimize Mismounted Tires

MOUNTING THE ASSEMBLY ON THE VEHICLE **45-48**

- Dual Spacing
- Technical Considerations for Fitting Tires
- Measuring Tires in Dual Assembly
- Tire Mixing
- Runout

WARNINGS!

IMPORTANT: BE SURE TO READ THIS SAFETY INFORMATION.

Make sure that everyone who services tires or vehicles in your operation has read and understands these warnings. **SERIOUS INJURY OR DEATH CAN RESULT FROM FAILURE TO FOLLOW SAFETY WARNINGS.** No matter how well any tire is constructed, punctures, impact damage, improper inflation, improper maintenance, or service factors may cause tire failure creating a risk of property damage and serious or fatal injury. Truck operators should examine their tires frequently for snags, bulges, excessive treadwear, separations, or cuts. If such conditions appear, demount the tire and see a truck dealer immediately.

The US Department of Labor Occupational Safety and Health Administration (OSHA) provides regulations and publications for safe operating procedures in the servicing of wheels. Please refer to OSHA Standard 29 CFR Part 1910.177 (Servicing Multi-Piece and Single Piece Rim Wheels). This can be found in the Section Ten, Appendix (Pages 179-181).

Specifically, note that the employer shall provide a program to train all employees who service wheels in the hazards involved in servicing those wheels and the safety procedures to be followed. The employer shall ensure that no employee services any wheel unless the employee has been trained and instructed in correct procedures of servicing the type of wheel being serviced, and shall establish safe operating procedures for such service.

Michelin provides the following information to further assist employers to comply with that initiative.

⚠WARNING

Tire and wheel servicing can be dangerous and must be done only by trained personnel using proper tools and procedures. Failure to read and comply with all procedures may result in serious injury or death to you or others.

⚠WARNING

Re-inflation of any type of tire and wheel assembly that has been operated in a run-flat or underinflated condition (80% or less of recommended operating pressure) can result in serious injury or death. The tire may be damaged on the inside and can explode during inflation. The wheel may be worn, damaged, or dislodged and can explosively separate.

Refer to USTMA Tire Information Service Bulletin on potential "zipper ruptures" – TISB Volume 33, Number 6.

USTMA (U.S. Tire Manufacturers Association) recommends that any tire suspected of having been run underinflated and/or overloaded must remain in the safety cage, be inflated to 20 psi OVER maximum pressure marked on the sidewall, and then be inspected. Do not exceed the maximum inflation pressure for the wheel.

Be sure to reduce pressure to regular operating pressure before placing back in service if the tire has been deemed serviceable.

⚠WARNING

Use of starting fluid, ether, gasoline, or any other flammable material to lubricate, seal, or seat the beads of a tubeless tire can cause the tire to explode or can cause the explosive separation of the tire and wheel assembly resulting in serious injury or death. The use of any flammable material during tire servicing is absolutely prohibited.

⚠WARNING

Any inflated tire mounted on a wheel contains explosive energy. The use of damaged, mismatched, or improperly assembled tire and wheel parts can cause the assembly to burst apart with explosive force. If you are struck by an exploding tire, wheel part, or the blast, you can be seriously injured or killed.

Re-assembly and inflation of mismatched parts can result in serious injury or death. Just because parts fit together does not mean that they belong together. Check for proper matching of all wheel parts before putting any parts together.

Mismatching tire and wheel component is dangerous. A mismatched tire and wheel assembly may explode and can result in serious injury or death. This warning applies to any combination of mismatched components and wheel combinations. Never assemble a tire and wheel unless you have positively identified and correctly matched the parts.

ZIPPER RUPTURES

A fatigue-related damage, with or without a rupture, occurs in the sidewall flex area of steel radial light, medium, and heavy truck tires when it is subjected to excessive flexing or heat. This zipper rupture is a spontaneous burst of compressed gas, and the resulting rupture can range in length anywhere from 12 inches to 3 feet circumferentially around the tire. This is caused by the damage and weakening of the radial steel cables as a result of run-flat, underinflation, or overload. Eventually, the pressure becomes too great for the weakened cables to hold, and the area ruptures with tremendous force.

The USTMA (U.S. Tire Manufacturers Association) states that permanent tire damage due to underinflation and/or overloading cannot always be detected. Any tire known or suspected of having been run at less than 80% of normal recommended operating pressure and/or overloaded, could possibly have permanent structural damage (steel cord fatigue).

Zipper Rupture

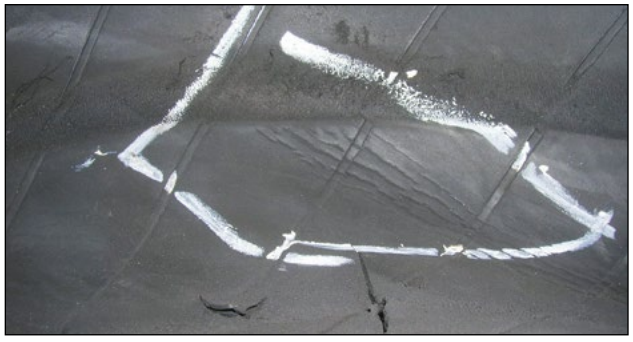

Inner Liner Marbling/Creasing

The USTMA has issued a revised Tire Industry Service Bulletin for procedures to address zipper ruptures in certain commercial vehicle tires. The purpose of the bulletin is to describe the inspection procedures for identifying potential sidewall circumferential ruptures (also known as "zipper ruptures") on truck/bus tires and light-truck tires of steel cord radial construction. Zipper ruptures can be extremely hazardous to tire repair technicians. Careful adherence to proper repair procedures is crucial.

For more information contact USTMA at info@ustires.org or visit www.USTires.org.

TIRE INSPECTION

Tire inspection should always include a thorough inspection of both sidewalls and inner liner, as this may reveal any potential damage condition that would cause the tire to become scrap. Examine the inner liner for creases, wrinkling, discoloration, or insufficient repairs, and examine the exterior for signs of bumps or undulations, as well as broken cords, any of which could be potential out of service causes. Proper OSHA regulations must be followed when putting any tire and wheel back in service. After the tire has been inflated to 20 psi in a safety cage, it should undergo another sidewall inspection for distortions, undulations, or popping noises indicating a breaking of the steel cords. If this is the case, immediately fully deflate and scrap the tire. If no damage is detected, continue to inflate to the maximum inflation pressure marked on the sidewall. Do not exceed the maximum inflation pressure for the wheel. Any tire suspected of having been run underinflated and/or overloaded must remain in the safety cage, be inflated to 20 psi OVER maximum pressure marked on the sidewall, and then be inspected.

Dual Cage

MICHELIN® X One® Tire Cage

Be sure to reduce tire pressure to regular operating pressure before placing back in service if the tire has been deemed serviceable.

AFTER YOU MOUNT THE MICHELIN® X ONE® TIRE ON THE WHEEL, YOU MUST CAGE IT!

1. SELECTION OF PROPER COMPONENTS AND MATERIALS

a. All tires must be mounted on the proper wheel as indicated in the specification tables. For complete tire specifications, refer to application specific data books.
b. Make certain that the wheel is proper for the tire dimension.
c. Always install new valve cores and metal valve caps containing plastic or rubber seals.
d. Always replace the rubber valve stem on a 16” through 19.5” wheel.
e. Always use a safety device such as an inflation cage or other restraining device that will constrain all wheel components during the sudden release of the tire pressure of a single piece wheel. Refer to current OSHA standards for compliance.

⚠WARNING

It is imperative to follow all of the following inflation safety recommendations. Failure to do so will negate the safety benefit of using an inflation cage or other restraining device and can lead to serious injury or death.

2. INFLATION SAFETY RECOMMENDATIONS

a. Do not bolt the inflation cage to the floor nor add any other restraints or accessories.

b. The inflation cage should be placed at least 3 feet from anything, including a wall.

c. Never stand over, or in front of a tire when inflating.
d. Always use a clip-on chuck and a sufficiently long air hose between the in-line gauge and the chuck to allow the service technician to stand outside the trajectory zone when inflating.

Clip-on Chuck

Trajectory zone means any potential path or route that a wheel component may travel during an explosive separation or the sudden release of the tire pressure, or an area at which the blast from a single piece wheel may be released. The trajectory may deviate from paths that are perpendicular to the assembled position of the wheel at the time of separation or explosion. See Rubber Manufacturers Association Tire Information Service Bulletin Volume 33, Number 4 for more information.

Note: Safety cages, portable and/or permanent, are also available for inflation of the MICHELIN® X One® tire assemblies.

3. TIRE AND WHEEL LUBRICATION

It is essential that an approved tire mounting lubricant be used. Preferred materials for use as bead lubricants are vegetable based and mixed with proper water ratios per manufacturer's instructions. Never use antifreeze, silicones, or petroleum-base lubricants as this will damage the rubber. Lubricants not mixed to the manufacturer's specifications may have a harmful effect on the tire and wheel.
The lubricant serves the following three purposes:

- Helps minimize the possibility of damage to the tire beads from the mounting tools.
- Helps ease the insertion of the tire onto the wheel by lubricating all contacting surfaces.
- Assists proper bead seating (tire and wheel centering) and helps to prevent eccentric mountings.

The Michelin product, Tiger Grease 80, MSPN 25817, is specifically formulated for commercial truck tire mounting. It can be obtained through any authorized Michelin Truck Tire dealer or by contacting Michelin Consumer Care (1-888-622-2306).

Apply a clean lubricant to all portions of the tire bead area and the exposed portion of the flap using sufficient but sparing quantities of lubricant. **Also, lubricate the entire rim surface of the wheel. Avoid using excessive amounts of lubricant, which can become trapped between the tire and tube and can result in tube damage and rapid tire pressure loss.**

NOTICE

It is important that tire lubricant be clean and free of dirt, sand, metal shavings, or other hard particles.

The following practice is recommended:

a. Use a fresh supply of tire lubricant each day, drawing from a clean supply source and placing the lubricant in a clean portable container.
b. Provide a cover for the portable container and/or other means to prevent contamination of the lubricant when not in use. For lubricants in solution, we suggest the following method that has proven to be successful in helping to minimize contamination and prevent excess lubricant from entering the tire casing: provide a special cover for the portable container that has a funnel-like device attached. The small opening of the funnel should be sized so that when a swab is inserted through the opening into the reserve of lubricant and then withdrawn, the swab is compressed, removing excess lubricant. This allows the cover to be left in place providing added protection. A mesh false bottom in the container is a further protection against contaminants. The tire should be mounted and inflated promptly before lubricant dries.

NOTICE

Avoid using excessive amounts of lubricants.

NOTICE

Dry mounting should be avoided. Use approved lubricants.

4. PREPARATION OF WHEELS AND TIRES

a. Always wear safety goggles or face shields when buffing or grinding wheels.
b. Inspect wheel assemblies for cracks, distortion, and deformation of flanges. Using a file and/or emery cloth, smooth all burrs, welds, dents, etc. that are present on the tire side of the wheel. Inspect the condition of bolt holes on the wheels. Rim flange gauges and ball tapes are available for measuring wear and circumference of aluminum wheels. For all wheel types, also refer to the inspection, repair, and other requirements from the wheel manufacturer.
c. Remove rust with a wire brush and apply a rust inhibiting paint on steel wheels. The maximum paint thickness is 0.0035" (3.5 mils) on the disc face of the wheel.
d. Remove any accumulation of rubber or grease that might be stuck to the tire, being careful not to damage it. Wipe the beads down with a dry rag.

GENERAL INSTRUCTIONS FOR TUBELESS MOUNTING/DEMOUNTING

In order for a tire to perform properly, it must be mounted on the correct size wheel. The following are general instructions for mounting and demounting Michelin tubeless tires, including the MICHELIN® X One® tires.

Specifics for 19.5" wheels are detailed in the Mounting Tubeless Tire section (Pages 34-36). For additional detailed instructions on mounting and demounting truck tires on particular types of wheels, refer to the instructions of the wheel manufacturer or the RMA wall charts.

1 **Inspect rim for excessive wear or damage. Correctly position and properly torque the valve stem: 80-125 in/lbs (7-11 ft/lbs) for standard aluminum wheels and 35-55 in/lbs (3-5 ft/lbs) for standard tubeless steel wheels.**

2 **Fully lubricate both flanges and the drop center.**

3 **Fully lubricate both beads and the inside of the bead that will be the last one mounted.**

4 **Place wheel in correct position, short side up (drop center up).**

5 **Do not use your knee to place the tire; use the proper tools/techniques.**

6 **Place the tire on the wheel using a rocking motion with adequate downward pressure (the bottom bead may drop over the wheel flange).**

7 If necessary, continue to work the first bead on with proper tubeless tire tools like T45A tire iron.

8 Mount second bead using same method.

9 Use the proper tool like T45A tire iron, not the duck bill hammer.

10 With assembly horizontal, inflate to no more than 5 psi to seat the beads.

11 Place the assembly in the safety cage for safe inflation.

12 Use a clip-on chuck and allows for a sufficient length of the hose to extends outside the safety cage.

TUBELESS TIRE MOUNTING/DEMOUNTING USING A MOUNTING MACHINE

There are several tire changing machines available for the mount and demount procedure. Consult the manufacturer's user manual for the machine you are using as each operates differently. Full lubrication of the wheel and **BOTH** tire beads is still required. Inflation process requirements remain the same.

TUBELESS TIRES MOUNTING/DEMOUNTING

MOUNTING TUBELESS

1. Inspect the condition of the bolt holes on the wheels, and look for signs of fatigue. Check flanges for excessive wear by using the wheel manufacturer's flange wear indicator. NEVER WELD A CRACKED WHEEL!

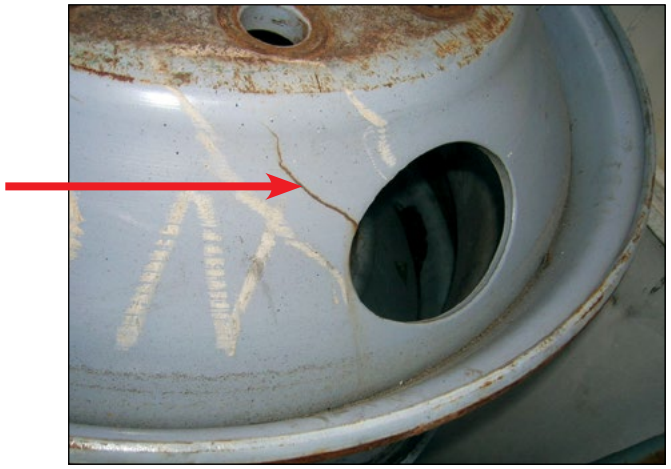

2. Replace valve core, and inspect valve stem for damage and wear. Michelin recommends always replacing the valve stem and using a new valve stem grommet. Ensure valve stem is installed using the proper torque value. 80-125 in/lbs (7-11 ft/lbs) for standard aluminum wheels and 35-55 in/lbs (3-5 ft/lbs) for standard tubeless steel wheels. Ensure the valve core is installed using the proper torque value of 1.5 – 4 in/lbs. To prevent galvanic corrosion on aluminum wheels, lubricate the threads and O-ring of the valve stem with a non-waterbased lubricant before installation.

3. Apply the tire and wheel lubricant to all surfaces of the wheel and bead area of the tire. When applying lubricant to the wheel, lubricate the entire rim surface of the wheel from flange to flange. The tire should be mounted and inflated before the lubricant dries.

4. With short ledge up, lay the tire over the wheel opposite the valve side and work it on with proper tubeless tire tools, making full use of the drop center well. Drop center wheels are typically designed with an off-set drop center to accommodate wheel width and brake clearance. This creates a "short side" and a "long side" on the wheel. (Some drop center wheels are designed with a symmetric wheel profile facilitating tire mounting from either side.) It is imperative that the tire always be mounted and dismounted only from the short side. Failure to do this will likely result in damaged tire beads that could eventually cause rapid gas loss due to casing rupture. This is particularly important on 19.5 inch RW (reduced well) aluminum wheels which, contrary to the norm, have their drop center located close to the disc side. Do not use a 19.5 x 7.50 wheel for the 305/70R19.5 tire size.

NOTICE

All 19.5 inch tubeless wheels should be mounted from the short side. Care should be taken to ensure that any internal monitoring system molded in the tire or on the wheel is not damaged or dislodged during this service.

Incorrect

Correct

19.5” Aluminum Wheels

1 **Fully lubricate both flanges and the drop center.**

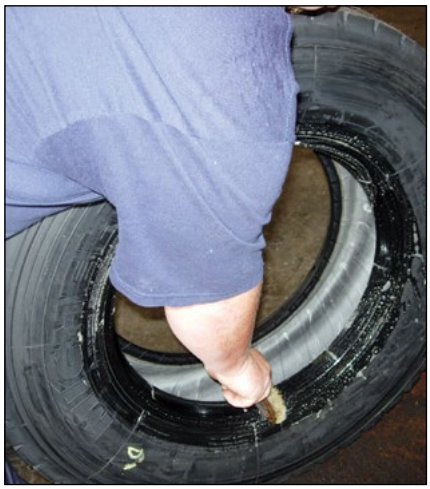

2 **Fully lubricate both beads and the inside of the bead that will be the last one mounted.**

3 **Start with short (narrow) side up, disc face up.**

4 **Work tire on with proper tubeless tire tools.**

5 **Do not use a duck bill hammer here!**

6 **Use rocking motion and pressure to place the bead.**

7 **Using the proper tool, seat the bead with one tool. Do not use a duck bill hammer here!**

8 **Or, seat the bead with the use of two tools. Do not use a duck bill hammer here!**

9 **Lay the assembly flat, inflate to no more than 5 psi, and following proper procedures, complete inflation process using Safety Cage (per OSHA standards).**

19.5" Steel Wheels

1 Fully lubricate both flanges and the drop center.

2 Fully lubricate both beads and the inside of the bead that will be the last one mounted.

3 Start with short (narrow) side up, disc face down.

4 Work tire on with proper tubeless tire tools.

5 Do not use a duck bill hammer here!

6 Place part of second bead in drop center.

7 Using the proper tool, seat the second bead.

8 Use the proper tool to obtain the correct bite. Do not use a duck bill hammer here!

9 Turn over assembly, laying horizontal, inflate to no more than 5 psi, and following proper procedures, complete inflation process using Safety Cage (per OSHA standards).

5. **Do not use any kind of hammer.**
Severe inner liner damage may occur resulting in sidewall separation and tire destruction. Use only proper mounting levers.

NOTICE

Do Not use a Duck Billed Hammer during the mounting process to strike the tire. For proper use of the duck billed hammer see Page 41.

Do not use a duck bill hammer to break the bead at demount.

Do not use a duck bill hammer to seat either bead at mounting.

Only use a duck bill hammer as a wedge with a rubber mallet.

6. The MICHELIN® X One® tire is designed to replace dual tires on the drive and trailer positions of tandem over the road vehicles, and the tires must be mounted on 22.5 x 14.00” size wheels. Position the tire and wheel assembly so the valve stem is facing outward, away from the vehicle.

Severe inner liner damage from use of hammer.

Resulting in sidewall separation and tire destruction from air infiltration.

SPECIAL TOOLS / MOUNTING MICHELIN® X ONE® TIRES

Special tools are available to aid in the mounting and demounting of the MICHELIN® X One® tire on/off the wheel and the MICHELIN® X One® assembly on/off the vehicle. Due to the size of the tire and wheel these tools will assist the tire technician in providing both safe and easy methods of removal and installation.

When removing any tire from a wheel you should use an Impact Bead Breaker (Slide Hammer) to prevent bead damage. This is also a safer way to dislodge the tire beads from the wheel.

Impact Bead Breaker (Slide Hammer)

NOTICE

Do not use hammers of any type. Striking a wheel assembly with a hammer can damage both the tire and the wheel and is a direct OSHA* violation.

* Occupational Safety and Health Administration

An extra wide safety cage is available for safe inflation of the tire. In most cases, a standard cage can accommodate the MICHELIN® X One® assembly.

DOT (Department of Transportation) requires that all truck tires are to be inflated in an inflation cage.

⚠WARNING

Tire changing can be dangerous and should be done only by trained personnel using proper tools and equipment as directed by Federal OSHA Standard No. 29 CFR Part 1910.177. Tires may explode during inflation causing injury to operator or bystander. Wear safety goggles. Keep all parts of body outside cage. Use extension hose, clip-on chuck, and remote valve.

Consult the MICHELIN® Truck Tire Data Book (MWL40732) or www.michelintruck.com for proper inflation.

Safety Cage with MICHELIN® X One® Tire

Tools for Handling the MICHELIN® X One® Tire Assembly:

Tire and wheel dollies are available from commercial tire supply companies to make the mounting and removing of the assemblies on/off of the vehicle easier. There are various types to choose.

A tire dolly may provide the lifting assistance to mount or remove the MICHELIN® X One® tire assembly, which may help to avoid possible injury.

Tire Dolly

Some people have difficulty standing on the tire using conventional mounting techniques, and good devices to help "hold" the bead in place without damaging the wheel are coated bead keepers, shown here.

Bead Keepers

Special Cart for Removing Stuck Wheels

INFLATION OF TUBELESS TIRES

⚠WARNING

Re-inflation of any type of tire and wheel assembly that has been operated in a run-flat or underinflated condition (less than 80% of normal recommended operating pressure) can result in serious injury or death. The tire may be damaged on the inside and can explode during inflation. The wheel parts may be worn, damaged, or dislodged and can explosively separate.

1. Lay tire and wheel assembly horizontally and inflate to no more than 5 psi to position the beads on the flanges. **OSHA dictates no more than 5 psi outside the cage to seat the beads.**

2. To complete the seating of the beads, place the assembly in an OSHA (Occupational Safety and Health Administration) compliant inflation restraining device (i.e. safety cage) and inflate to 20 psi. Check the assembly carefully for any signs of distortion or irregularities from run-flat. If run-flat is detected, scrap the tire.
3. If no damage is detected, continue to inflate to the maximum pressure marked on the sidewall. USTMA (U.S. Tire Manufacturers Association) recommends that any tire suspected of having been underinflated and/or overloaded must remain in the safety cage at 20 psi over the maximum pressure marked on the sidewall. Do not exceed the maximum inflation pressure for the wheel. USTMA requires that all steel sidewall tires are inflated **without** a valve core.
4. Ensure that the guide rib (GG Ring/mold line) is positioned concentrically to the rim flange with no greater than 2/32" of difference found circumferentially. Check for this variation by measuring at four sidewall locations (12, 3, 6, 9 o'clock). If bead(s) did not seat, deflate tire, re-lubricate the bead seats and re-inflate.

Note: As a general guide in vibration analysis, the 30/60/90 rule may apply:
.030-.060 (1/32 to 2/32 inch) = No action is required. Limited possibility for vibration exists, and this range maximizes the ability to balance properly.
.061-.090 (2/32 to 3/32 inch) = Corrective action would be to perform the 3 R's, after deflating the tire.
- – Rotate the tire on the wheel
- – Re-lubricate the tire and wheel (ensure the wheel is very clean)
- – Re-inflate ensuring your initial inflation is with the tire lying horizontal (3-5 psi max)

>.090 (>3/32 inch) = Perform 3 R's if mismount is indicated; however, when the reading is this high, it usually requires checking runout on these component parts: wheels/hubs/drums/wheel bearings.

5. After beads are properly seated, place the tire in the safety cage and inflate assembly to maximum pressure rating shown on the sidewall, then reduce to operating pressure. Check the valve core for leakage, then install suitable valve cap. Consider the use of inflate-thru or double seal valve caps for easier pressure maintenance.

Valve Caps, Cores, and Stems

Inflate-Thru Valve Caps

DEMOUNTING OF TUBELESS TIRES

1. If still fitted on the vehicle, completely deflate the tire by removing the valve core. In the case of a dual assembly, completely deflate both tires before removing them from the vehicle (OSHA requirement). Run a wire or a pipe cleaner through the valve stem to ensure complete deflation.

2. With the tire assembly lying flat (after deflating the tire), break the bead seat of both beads with a bead breaking tool. Do not use hammers of any type to seat the bead. Striking a wheel assembly with a hammer of any type can damage the tire or wheel and endanger the installer. **Use a steel duck bill hammer only as a wedge.** Do not strike the head of a hammer with another hard faced hammer – use a rubber mallet.

3. Apply the vegetable-based lubricant to all surfaces of the bead area of the tire.

4. Beginning at the valve, remove the tire from the wheel. Starting at the valve will minimize chances of damaging the valve assembly. Make certain that the rim flange with the tapered ledge that is closest to the drop center is facing up. Insert the curved ends of the tire irons between the tire and rim flange. Step forward into the drop center and drop the bars down, lifting the tire bead over the rim flange. Hold one tire iron in position with your foot. Pull the second tire iron out and reposition it about 90 degrees from the first iron. Pull the second tire iron towards the center of the wheel. Continue to work tools around wheel until first bead is off the wheel.

5. Lift the assembly, place and rotate the tire iron to lock on the back rim flange, allow the tire to drop, and with a rocking motion remove the tire from the wheel.

1 **Use a Slide Hammer.**

2 **Or a duck bill hammer as a wedge, with a rubber mallet.**

3 **Lubricate both beads completely to avoid demount damage.**

⚠WARNING

Never inflate or re-inflate any tires that have been run underinflated or flat without careful inspection for damage, inside and out.

4 Be sure to start at the valve stem, not away from or opposite.

5 Step forward into the drop center, laying the bars down.

6 Progressively work tools around the wheel until the first bead is off the wheel.

7 Completely unseat the first bead.

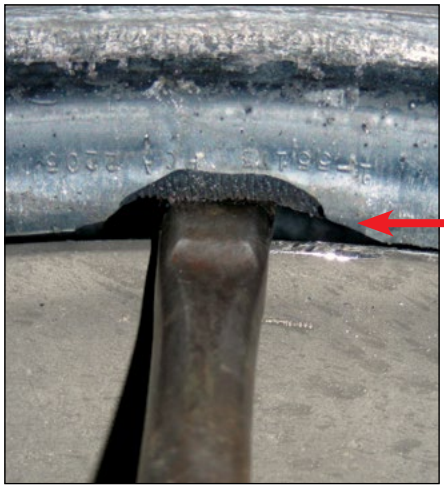

8 Failure to work with small sections on a non-lubricated bead will result in unnecessary damage to the bead.

9 Lift the assembly, place the tire iron inside, rotate to lock the tab against the flange.

10 Allow the assembly to drop, and rock the tire from the wheel.

MISMOUNT

Mismount occurs when the tire beads do not seat fully on the tapered rim flange area of the wheel. As can be seen in this diagram, one of the tire beads has fully seated against the rim flange. But in another small area the bead did not "climb" completely up the tapered area of the wheel. In this area the bead is tucked further under the wheel making the sidewall slightly shorter. If the tire continues to run, it will develop "maxi-mini" wear, which is characterized by the tread depth on one side of the tire being deeper than on the other side. In this case, balancing will only be a "band-aid." In other words, the tire may be balanced for a few thousand miles, but as the tire wears, the weights would have to magically shift to another part of the tire and wheel assembly in order to maintain proper balance. Because they don't magically shift to other locations, the driver usually comes back after a few thousand miles saying "whatever you did, it worked for a little while, but now the vibration has come back."

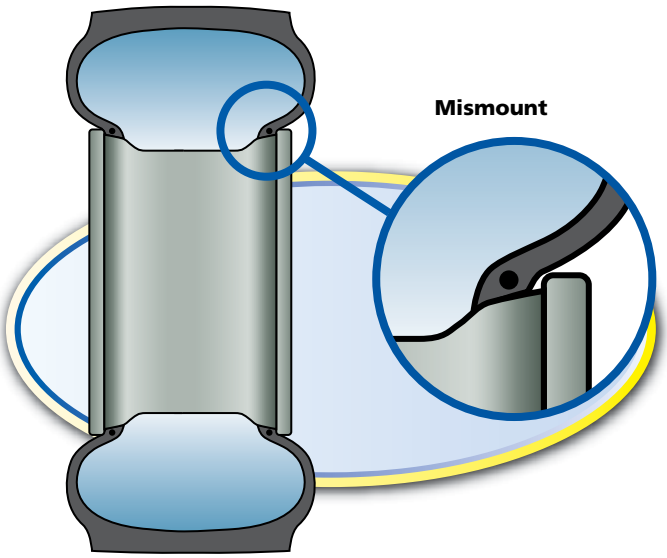

If the tire mismount is not detected immediately, the tire may develop localized shoulder wear. Eventually the tire wear pattern will appear around the rest of the shoulder, sometimes resulting in a noceable ride disturbance.

If mismount is detected early: deflate, dismount, inspect, re-lube, and re-mount the tire. Sometimes the irregular wear from mismount may be too significant to fix. At this point you can either send the tire to the trailer position or retread the casing.

For a detailed discussion on mismount, please refer to the Runout & Match Mounting video from your Michelin Representative or visit www.michelintruck.com/reference-materials/videos/#/maintenance-and-training.

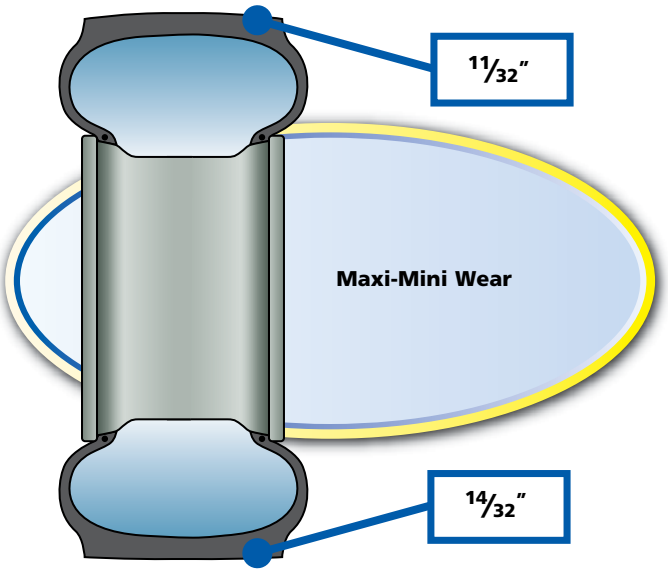

THERE ARE 3 EASY STEPS TO HELP MINIMIZE MISMOUNTED TIRES:

1. Use a generous amount of tire lube.

Make sure that you only dilute the lube to the specifications of the manufacturer. Some shops will try to dilute the lube additionally to save money. This is a bad idea because the dollar or two you save on a bucket of lube won't be worth replacing a tire due to irregular wear caused from mismount or damaged beads.

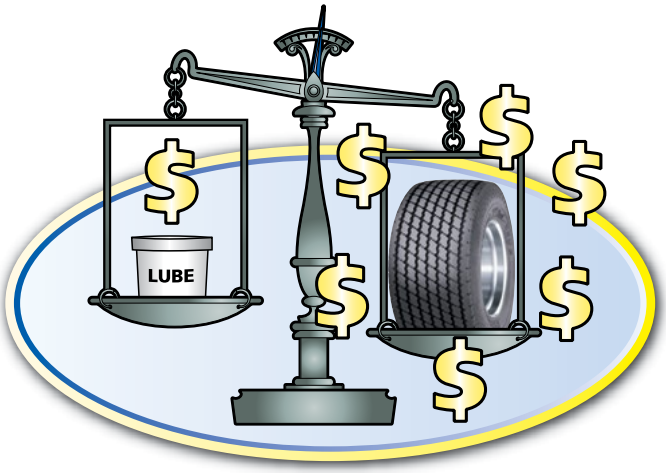

2. Inflate the assembly enough to seat the beads with the tire laying horizontally or parallel to the ground.

A good practice to follow that will ensure the tire beads are seated properly is to lay the tire and wheel horizontally on the ground, or better yet, use a 5 gallon bucket as a stand, which will keep the bottom sidewall from touching the ground. The reason you want to seat the beads with the tire horizontal is that if the initial inflation is done with the tire and wheel standing vertically, the weight of the wheel pushing down on the two beads must be overcome in order to center the wheel on the tire. A MICHELIN® X One® tire wheel weighs between 70 and 125 lbs. and it can be very hard to overcome gravity if tire beads are seated with the tire and wheel inflated standing up. Occupational Safety and Health Administration (OSHA) guidelines require the tire to be inflated in an approved safety cage. However, the first 3 to 5 psi of pressure may be applied to the tire outside the safety cage to properly seat the beads.

Five gallon bucket filled with weights.

3. Inspect the guide rib to ensure that the tire is concentrically mounted.

Using a small machinist's ruler (available at most hardware stores for ~$2), check the wheel flange to the guide rib on your inflated tire. The maximum variation allowed is 2/32". You should check the wheel flange to the guide rib at 4 locations: 12:00, 3:00, 6:00, and 9:00.

MOUNTING THE ASSEMBLY ON THE VEHICLE

When wheel assemblies are mounted on a vehicle, be sure that the valves do not touch the brake drums or any mechanical part of the vehicle. When mounting the MICHELIN® X One® tire utilizing a 2" outset wheel onto a vehicle, position the tire so that the tire sits on the outboard side of the wheel similar to where the outer dual would normally be positioned. Position the tire and wheel assembly so the valve stem is facing outward, away from the vehicle.

Valves of dual tires should be diametrically opposite. Ensure that the inside valve is accessible so the pressure can be checked and maintained.

Tires mounted in dual must be matched so that the maximum difference between the diameters of the tires does not exceed 1/4" diameter or a circumferential difference of 3/4". For tires of the same bead diameter and size, the maximum allowable difference in tread depth is 4/32". Failure to properly match dual tires will result in the tire with the larger diameter carrying a disproportionate share of the load. Mismatched duals can lead to rapid wear, uneven wear, and possible casing failure.

Incorrect Dual Wheel Placement

Tandem drive axle vehicles without an inter-axle differential (or when it is locked out) necessitate that tires are closely matched. The inter-axle differential is a gear device dividing power equally between axles and compensating for such things as unequal tire diameters, the effect of front and rear suspensions, torque rod positioning and the like on the working angles of the universal joints. Normally in the unlock position, this provides minimized wear and tear on tires and the drivetrain. Tandem drive rear axles (twin-screw) require that the average tire circumference on one axle be within 1/4" of the average tire diameter on the other axle to prevent damage to the drive differentials resulting from different revolutions per mile on the drive axles.

Since any one tire of the size used with these axles may lose as much as 2.5" in circumference due to normal wear and still be serviceable, it is readily seen that a wide difference in tire circumference may exist.

Equal tire inflation (between adjacent duals) at the pressures recommended by the tire manufacturer should be maintained.

IMPORTANT: Check to ensure that you know which mounting system you are working with and that the components are correct. For additional information, see Wheel Systems on Pages 16-18 of Section Two, Selecting a Wheel.

DUAL SPACING

It is also important that sufficient space is provided between dual tires to allow air to flow and cool the tires and to prevent the tires from rubbing against one another.

To make sure dual spacing is correct, simply measure from the outside edge of the outer tire to the outside edge of the inner tire of the dual assembly. This will give you the center to center distance of the duals across that axle end. Refer to the minimum dual spacing column in the application data books.

TECHNICAL CONSIDERATION FOR FITTING TIRES

When fitting tires of sizes different than those specified by the vehicle manufacturer, the following points must be considered:

1. GEAR RATIO

A change in tire dimension will result in a change in engine RPM at a set cruise speed, which will result in a change in speed, tractive effort, and fuel economy. Therefore, the effect of a tire size change on the gear ratio should be considered in individual operations. Generally, changes of 2% for a given diameter or less will have a negligible effect on gear ratio, tractive effort, and indicated/actual speed. If a smaller wheel diameter is chosen, make sure that brake over wheel clearances are checked before continuing with the mounting. (Changes in diameter of more than 3% percent should be discussed with the vehicle manufacturer.)

- The formula for calculating the top speed is:

$$\text{Top Speed (MPH)} = \frac{\text{Engine RPM} \times 60}{(\text{Tire Revs./Mile}) \times R}$$

Where MPH = Miles Per Hour
RPM = Revolution Per Minute (Engine)
R = Overall Gear Reduction

- Since engine RPM and R will remain the same when changing from one tire to another, the comparison is simply a straight ratio of the Tire's Revs./Mile.

Example:

	Tire Revs./Mile		
11R24.5 MICHELIN® XDN2®	=	473
455/55R22.5 MICHELIN® XDN2®	=	495
	Ratio		
	473/495	=	0.96

(= 4%. This change requires a gear ratio change as well as a speedometer change or ECM (Engine Control Module) program adjustment.)

Therefore, when the vehicle's speedometer reads 75 mph, the vehicle is actually traveling 72 mph.

If the governed speed for a vehicle originally equipped with 455/55R22.5 tires is 75 mph, the top speed with 11R24.5 will be (495/473) (75 mph) = (1.05) (75 mph) = 78.8 mph. The speedometer will read 75 mph when the vehicle is actually traveling 78.8 mph.

Rule of Thumb: When going from a lower Tire Revs./Mile to a higher Tire Revs./Mile, the actual vehicle speed is less than the speedometer reading. When going from a higher Tire Revs./Mile to a lower Tire Revs./Mile, the actual vehicle speed is greater than the speedometer reading.

2. WHEEL DIAMETER

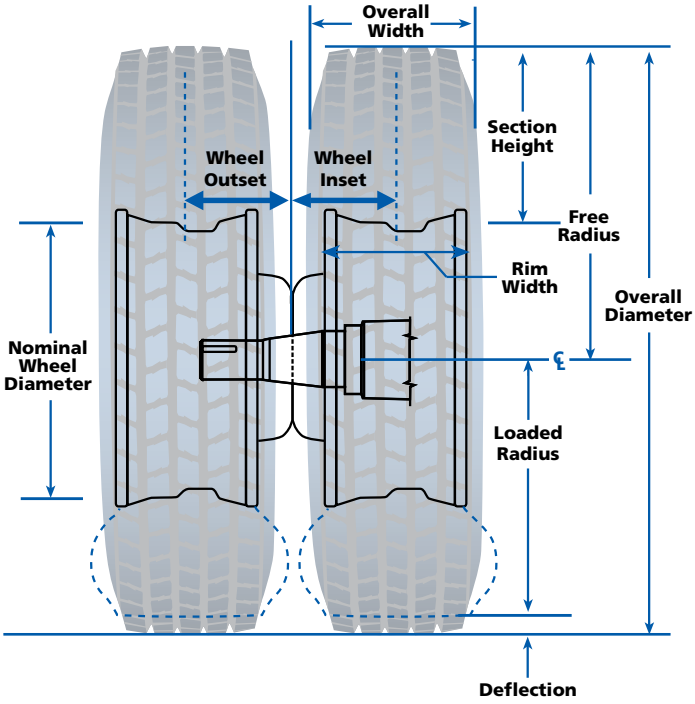

3. WHEEL WIDTH

An increase in the tire section may require a wider rim with a greater outset.

4. WHEEL OUTSET/INSET FOR DUAL WHEELS

The minimum wheel outset required is determined by the tire minimum dual spacing. Outset is the lateral distance from the wheel centerline to the mounting surface of the disc. Outset places the wheel centerline outboard of the mounting (hub face) surface. Inset is the lateral distance from the wheel centerline to the mounting surface of the disc. Inset places the wheel centerline inboard of the mounting (hub face) surface.

OFFSET for front wheels: When retrofitting steer axles with tires and wheels of a width different from the OE size, wheel offset must be considered. Wheel offset should be chosen to avoid interference with vehicle parts and also to avoid exceeding overall vehicle width regulations.

5. TIRE CLEARANCES

All clearances around a tire should be checked:

- To the nearest fixed part of the vehicle, i.e., to parts that are not affected by spring deflection or steering mechanism.
- To the nearest part of the vehicle, which can be moved, i.e. parts that are affected by spring deflection or steering mechanism.

Consideration should be given to any additional clearance required by the use of chains. Minimum clearances recommendation: 1".

a. Lateral Clearances

Lateral clearance is the smallest distance horizontally between the tire and the nearest fixed point of the vehicle. Lateral clearance will be reduced by an increase in the offset of the inner wheel plus half of any increase in the tire section.

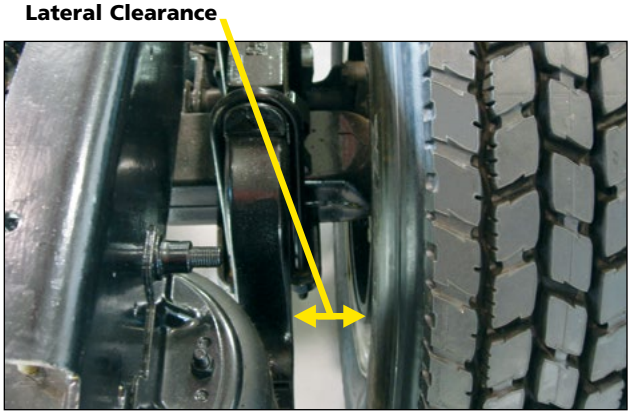

Note: When using a 2" outset wheel, the MICHELIN® X One® tire should be mounted so that the tire sits outward similar to an outer dual tire. However, use of outset wheels may change Gross Axle Weight Rating (GAWR). Consult vehicle manufacturer.

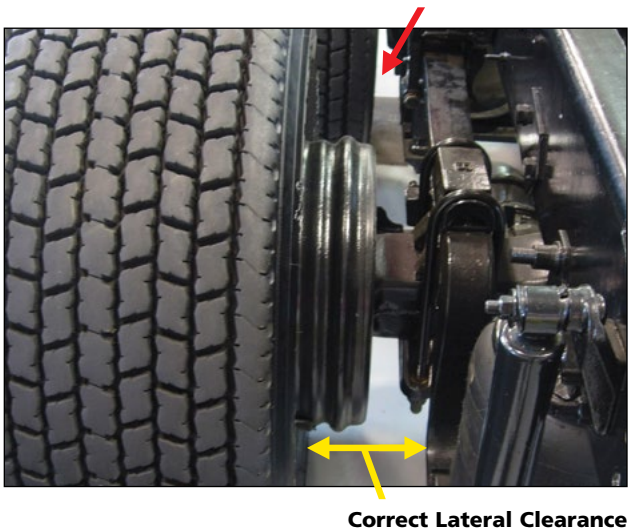

b. Vertical Clearances

Vertical clearance is measured between the top of the tread and the vehicle component immediately above the tire (usually a fender). This will vary as the springs operate. The vertical movements of the whole axle, in relation to the whole chassis, are normally limited by an axle stop. When measuring vertical clearance, subtract the axle stop clearance from the total clearance; the difference is the remaining vertical clearance. When checking vertical clearance, consideration must be given to the degree of tread wear, and an allowance of 1" must be made if the tread on the existing tire is between 2/32" and 4/32".

Vertical and body clearances are decreased by any increase in the free radius of the tire.

When using tire chains, a minimum of two inches of clearance is needed to provide space between the dual assembly and the vehicle.

Check to be sure that the body clearance is not less than the vertical clearance. A fender bolt may be closer to the tire than the fender. This, then, is the smallest distance and should be recorded.

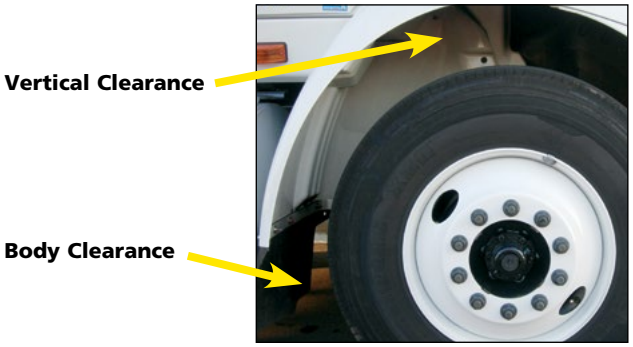

c. Longitudinal Clearances

The semi-elliptical spring method of suspension permits the axle to move back longitudinally as well as vertically when the spring deflects. As a guide, the maximum backward movement may be taken as one third of the distance between the shackle pin centers. The remaining longitudinal clearance must be noted.

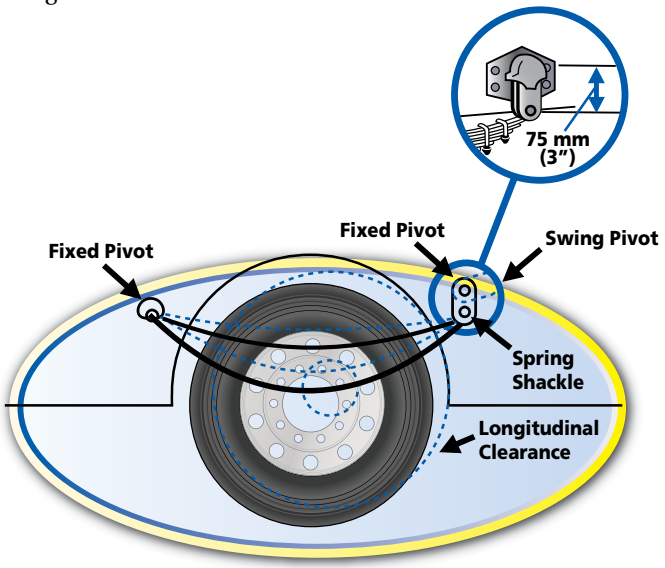

d. Front Wheel Clearances

The clearances of both front wheels must be measured on both steering lock positions. Clearances of front wheels must be checked by turning the wheels from full left lock to full right lock since the minimum clearance might occur at some intermediate point.

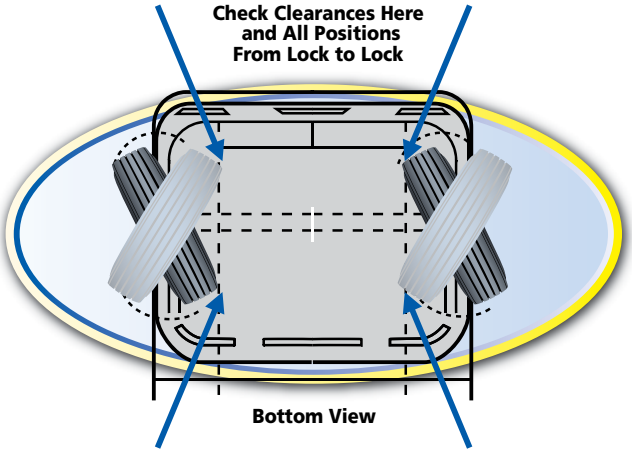

Steering Stops should be measured as they control the angle of the turn. Ensure they exist and are not damaged. Damage may indicate clearance issues or be a cause of abnormal tire wear.

6. OVERALL WIDTH

When fitting larger tires, the overall width of the vehicle across the tires is increased by half of the increase in the cross section of each outside tire and the increase in offset of each outside wheel.

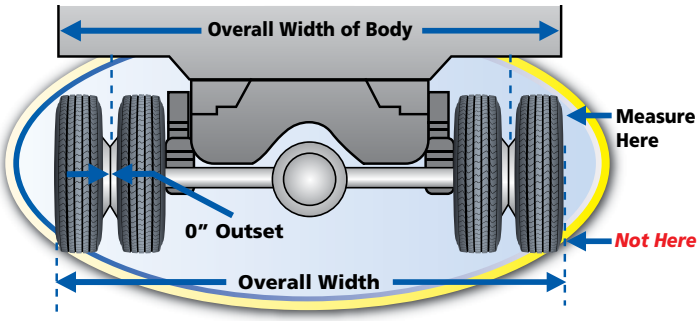

7. SPARE WHEEL RACK

Always check the spare wheel rack to see that the tire will fit. Ensure that location is not in proximity to engine exhaust.

8. LEGAL LIMITS

Most states and provinces in North America have legal limits for vehicle carrying capacities, overall vehicle dimensions, and minimum ground clearances. Each of these factors must be taken into consideration. Check with local jurisdictions.

MEASURING TIRES IN DUAL ASSEMBLY

If drive and trailer tires are of equal tread depth and have equal inflation pressure, the inner tire in the dual assembly is subjected to more deflection, as it is under a heavier load and is affected by the condition of the road on which it operates. This result of road slope (Interstate System and primary roads) or road crown (secondary roads) on the inner tire is more grip than the outer tire achieves. Thus, the inner tire dictates the revolutions per mile of the assembly, resulting in the outer tire having more rapid tread wear.

Measuring the circumferences of the tires with an endless tape after they are on the wheels and inflated, but before they are applied to a vehicle, is the most accurate method. The endless tape, as the name signifies, is a tape made of one half inch bending steel, one end of which passes through a slot at the other end of the tape and forms a loop. Measuring in this manner takes into account any irregularities in wear.

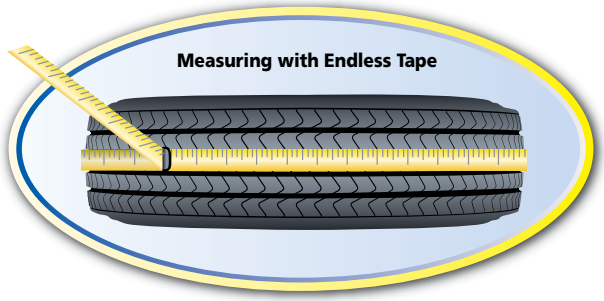

In checking tires already on a vehicle, the following may be used: (A) a square (similar to but larger than a carpenter's square), (B) a string gauge, (C) a large pair of calipers, or (D) a wooden straight edge long enough to lie across the treads of all four tires.

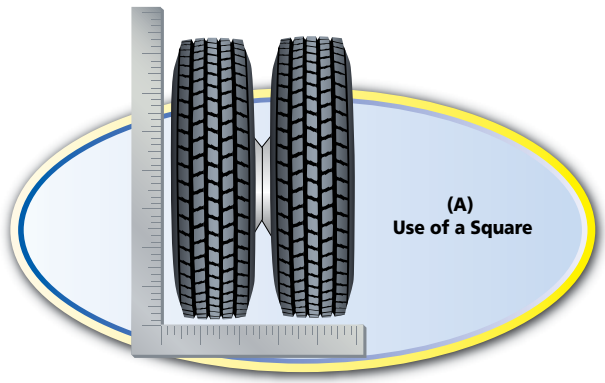

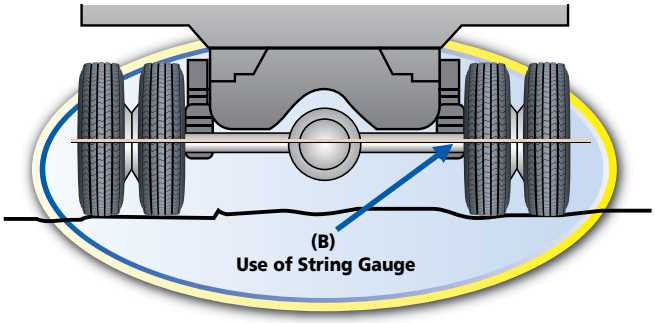

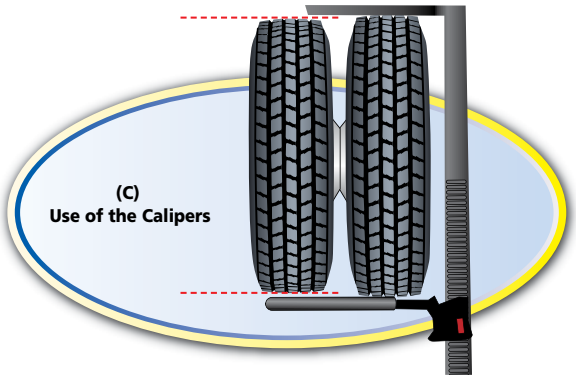

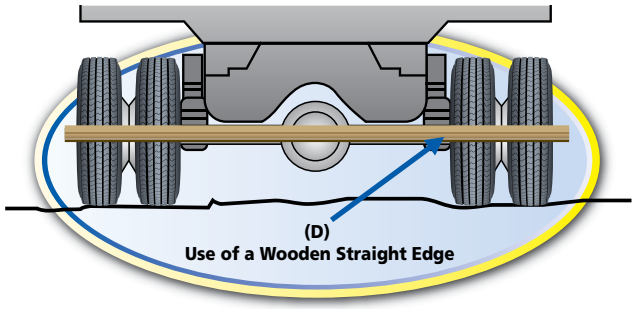

TIRE MIXING

⚠WARNING

Do not drive on improperly mixed tires. Doing so can lead to tire failure and /or handling issues leading to an accident, personal injury or death.

Trucks with four wheel positions: For the best performance it is recommended that the same size, design, and construction of tire be used on all four wheel positions. If only two MICHELIN® radials are mounted with two non-radials, the radials should be mounted on the rear. If tires of different design are mixed on a vehicle in any configuration, they should not be used for long periods, and speeds* should be kept to a minimum

Mixing or matching of tires on 4-wheel drive vehicles may require special precautions. Always check vehicle manufacturer's Owners Manual for their recommendations.

Trucks with more than four wheel positions: For best performance, it is recommended that radial and non-radial tires should not be mixed in dual fitment. It is unlawful and dangerous to mix radials and bias tires on the same axle.

*Exceeding the safe, legal speed limit is neither recommended nor endorsed.

RUNOUT

The ideal time to verify that proper mounting procedures have resulted in concentric bead seating is during the installation of new steering tire/wheel assemblies. The 'on vehicle' assembly radial and lateral runout measurements should be the lowest possible to offer the driver the smoothest ride. Both the guide rib variance and the hub to wheel clearance on hub piloted assemblies can be measured following the procedures found in the Runout and Vibration Diagnosis guidelines on Pages 176-178 of Section Ten, Appendix.

SECTION FOUR

Extending Tire Life

Section Four

Extending Tire Life 49-80

MAINTAINING THE TIRE 50-58

Inflation Pressure 50
- Underinflation
- Overinflation
- Proper Inflation
- How to Properly Measure Pressure
- Temperature/Pressure Relationship Graph
- Nitrogen

Footprint Comparisons to Dual Tire Fitments

Sealants - Foreign Matter in Tires

Tire Inspection

Automated Tire Inflation System (ATIS) or Tire Pressure Monitoring System (TPMS)

Drive Carefully

Tread Depth Measurements

Wear Bars

Do Not Overload

Drive at Proper Speeds

Balance and Runout

CARE, CLEANING, AND STORAGE 59-62

Storage

Stacking of MICHELIN® X One® Tires

Flood Damage

Cleaning and Protection

Diesel Fuel Contamination

Chains

Tire Damage Resulting from Non-Compliant Runflat/Beadlock Devices

Recommendations for Use of Dynamometers

Spinning

Rotation

Siping

Branding

MAINTAINING THE VEHICLE 63-80

Major Vehicle Factors That Affect Tire Life 63
- Alignment
- Steer Axle Geometry
- Toe
- Tandem Axle Parallelism (Skew - Thrust)
- Thrust Angle (Tracking)
- Camber
- Caster
- Steer Axle Setback (Steer Axle Skew)
- Toe-Out-On-Turns (Turning Radius)
- TMC Recommended Alignment Targets
- Periodic Alignment Checks
- Alignment Equipment
- Field Check Techniques
- Axle Parallelism and Tracking
- How to Check Axle Parallelism and Tracking

Tire Wear Patterns Due to Misalignment 70
- Toe Wear
- Free Rolling Wear
- Camber Wear
- Cupping Wear
- Flat Spotting Wear
- Diagonal Wear

Irregular Tire Wear 73
- Heel-Toe
- Center Wear
- River Wear Only
- Step-Shoulder/Localized Wear Shoulder Cupping
- Brake Skid

Braking Systems and Issues 75
- Summary of Tire Issues Due to Brakes
- Brake Heat Overview

Fifth Wheel Maintenance and Placement 78

Wheel Bearing and Hub Inspection 78

Suspensions 78
- Air Suspension Systems
- Quick Checks for Trailer System Faults
- Quick Checks for Front Suspension Faults
- Quick Checks for Rear Suspension Faults

MAINTAINING THE TIRE

Pressures on all newly delivered equipment should be verified for the application/operation prior to the vehicle being placed in service. Verify that any pressure monitoring or inflation system is correctly set for your fleet application on the delivery of any new equipment.

Proper maintenance is important in order to obtain maximum performance.

INFLATION PRESSURE

The most critical factor in tire maintenance is proper inflation. No tire or tube is completely impervious to loss of pressure. To avoid the hazards of underinflation, lost tire pressure must be replaced.

Driving on any tire that does not have the correct inflation pressure is dangerous and will cause tire damage.

Any underinflated tire builds up excessive heat that may result in sudden tire destruction. The correct inflation pressures for your tires must incorporate many factors including: load, speed, road surface, and handling.

Consult a Michelin Truck Tire dealer or MICHELIN® data books for the proper inflation pressures for your application. See Section Ten, Appendix (Page 186) for complete listings of the MICHELIN® data books.

Failure to maintain correct inflation pressure may result in sudden tire destruction and/or improper vehicle handling. Additionally it will result in irregular wear. Therefore, inflation pressures should be checked weekly and always before long distance trips.

Check inflation pressures on all your tires at least once a week, including spares, before driving when tires are cold, especially when vehicle is used by more than one driver.

The ideal time to check tire pressures is early morning. Driving, even for a short distance, causes tires to heat up and pressures to increase.

Generally, as a radial tire revolves during operation, heat is generated on the inside of the tire at 4 degrees per minute. However, the tire loses heat at the rate of 3 degrees per minute with dissipation throughout the casing and air flow around the tire. After 40 minutes of continuous operation, the tire temperature has increased 40 degrees Fahrenheit. As the temperature inside the tire increases, the inflation pressure also increases. Thus, a tire inflated to 80 psi cold would now be at 85 psi. Because the inflation pressure has increased, the amount of tire flexing has decreased, which decreases the amount of heat generated per minute to 3 degrees per minute. Assuming the heat dissipation factor is still 3 degrees Fahrenheit per minute, the net temperature change is nil (0). This is called thermal equilibrium.

Always inspect valve stems for proper installation and torque, and verify there is a good tight seal by use of a leak detector type spray such as a water/soap solution applied from a spray bottle. It is also a good practice to periodically check existing fitments for slow leaks with this method.

Never bleed hot tires, as your tires will then be underinflated. Make sure to check both tires in a dual fitment. Pressures should be the same. Maximum allowable difference between dual tires or between axles should be no greater than 5 psi.

Remember, a drop in ambient temperature results in a drop in tire pressure. More frequent checks may be required during cold weather conditions. Avoid outdoor pressure checks when the temperature is below freezing. Ice can form in the valve stem, thus promoting leaks. Check inside a heated facility if possible.

Use an accurate calibrated tire gauge to check pressures. (Do not use “Tire Billys” to hit tires as an inflation check. This is an unreliable method.)

Unless otherwise recommended by tire manufacturer for optimized tire performance, use the tire inflation pressure shown in the application data books for the particular axle load. Exceeding this pressure could result in reduced traction and tread life.

Never inflate to cold pressure beyond the rated capacity of the wheel. However, for steering tires, it is common practice to use higher inflation pressures than necessary to carry the axle load to reduce free rolling wear.

Following are two examples of applying the previous considerations to an operation where the user mounts new 275/80R22.5 LRG (with a data book maximum of 110 psi tires) steer tires and desires to increase the pressure in order to see if this will help alleviate the occurrence of free rolling wear.

Example 1: If the axle load is 10,310 lbs., then the table in the data book specifies a corresponding pressure of 85 psi. Then the user can increase the pressure 15-20 psi above that to 100 or 105 psi.

Example 2: If the axle load is 12,350 lbs., then the table in the data book recommends 110 psi. As this is the maximum load of the tire, only a 10% pressure increase is permitted. Thus the adjusted pressure would be limited to 120 psi.

This procedure should not be applied “across the board.” If satisfactory tire performance and wear are being obtained with “table” pressures for a given load, then leave well enough alone.

Overinflation can cause an increase in road shocks and vibrations transmitted to the vehicle as well as an increase in tire failures from road hazards.

NOTE: In no case should the maximum capacity of the wheel be surpassed. Consult wheel manufacturer’s specifications.

NOTE: The following illustration is based on the recommended inflation pressure from the data book for the load being carried.

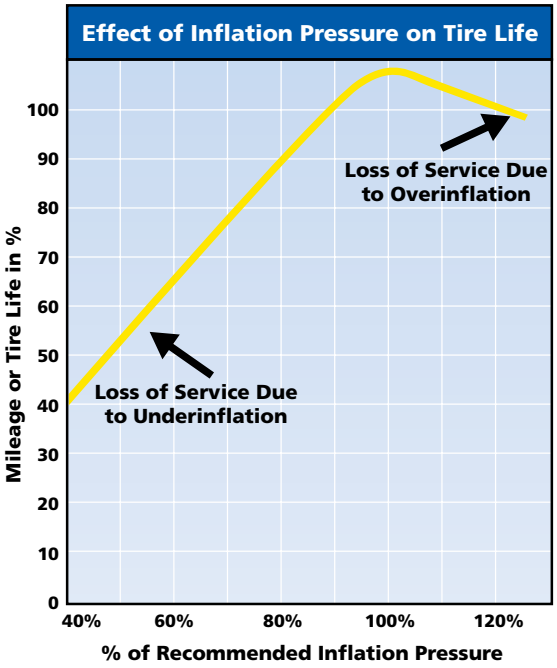

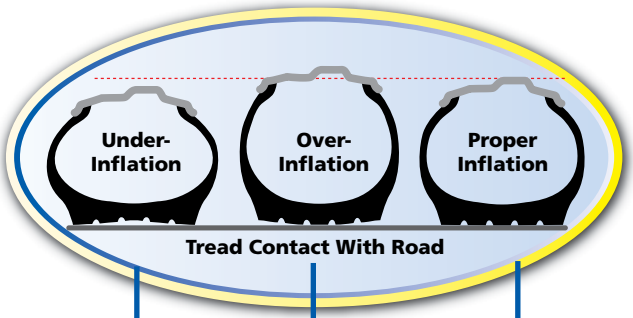

UNDERINFLATION

Causes abnormal tire deflection, which builds up heat and causes irregular wear. Similar to the wheel being too wide.

OVERINFLATION

Causes tires to run hard and be more vulnerable to impacts. It also causes irregular wear. Similar to the wheel being too narrow.

PROPER INFLATION

The correct profile for full contact with the road promotes traction, braking capability, and safety.

Mismatched pressure in dual position will cause the tires to rotate at different revolutions per mile resulting in irregular wear and tire damage.

NOTE: Due to the unique casing design of the MICHELIN® X One® tire, traditional pressure adjustment practices for dual tires may not apply to the MICHELIN® X One® tire product line. For additional information, see Page 94, Section Five: MICHELIN® X One® Tires.

It is important to maintain inflation equipment (compressor, inflation lines, and dryer) so as not to repeatedly introduce moisture into the tire, thereby accelerating oxidation effects to the tire and wheel.

HOW TO PROPERLY MEASURE PRESSURE

The first step in properly measuring the MICHELIN® X One® tires is to have an accurate pressure gauge. Pressure gauges should be checked weekly against a master calibrated pressure gauge. *Tire Billy's and Thumpers are not considered accurate tire gauges!*

Sometimes, reading the gauge can present difficulties if personnel are not properly trained. Spend the time to explain to your personnel the increments on the gauge and how to properly read pressure. It is highly recommended that you use a real tire and let the trainee take the pressure and tell you what it reads.

Proper pressure maintenance is critical to obtain optimized performance from the MICHELIN® X One® tires. As part of the pre-trip inspection, it is recommended that the MICHELIN® X One® tires are checked daily with an accurate tire pressure gauge.

Check all tires when cold; at least 3 hours after the vehicle has stopped. Never bleed tire pressure from hot tires.

Underinflation can lead to:

- Adverse handling conditions
- Zipper ruptures
- Casing fatigue and degeneration
- Irregular wear
- Decreased tread life
- Reduced fuel economy

Overinflation can lead to:

- Adverse handling conditions
- Reduced resistance to impacts and penetrations
- Increased stopping distances
- Irregular wear
- Decreased tread life

NITROGEN

Nitrogen is a very dry inert gas which makes up approximately 78% of the air around us and can be effected by humidity. Tires inflated with a normal air compressor already contain 78% nitrogen. Increasing the nitrogen percentage to 100% with a nitrogen inflation system will not adversely affect the inner liner of the tires nor the performance of the tires under normal operating conditions. While there are advantages for industrial and large off-the-road earthmover tires, the advantage in commercial truck products is difficult to verify. Moisture, rather than oxygen, is the bigger concern for casing degradation. Using good equipment (compressor, inflation lines, and dryer) will reduce the moisture content of the air in the tire. Moisture, when present in the tire, greatly accelerates the oxidation effects to the tire and wheel. The introduction of even a small amount of normal air will negate the advantage of the intended use of 100% nitrogen. If a nitrogen system is to be utilized, Michelin would recommend it be installed by trained personnel using appropriate equipment and safety guidelines. Regular pressure maintenance remains critical, and tire inflation check intervals should not be extended due to nitrogen use.

TEMPERATURE/PRESSURE RELATIONSHIP GRAPH

This graph displays the reason behind checking your tires when cold. As ambient temperature increases, pressure increases. An increase in ambient and/or operating temperature will result in an increase in tire pressure. Checking the tires when hot will result in an elevated reading. A good field thumb-rule to use is that for every 10-degree F increase in temperature above 65, the tire's pressure will increase 2 psi.

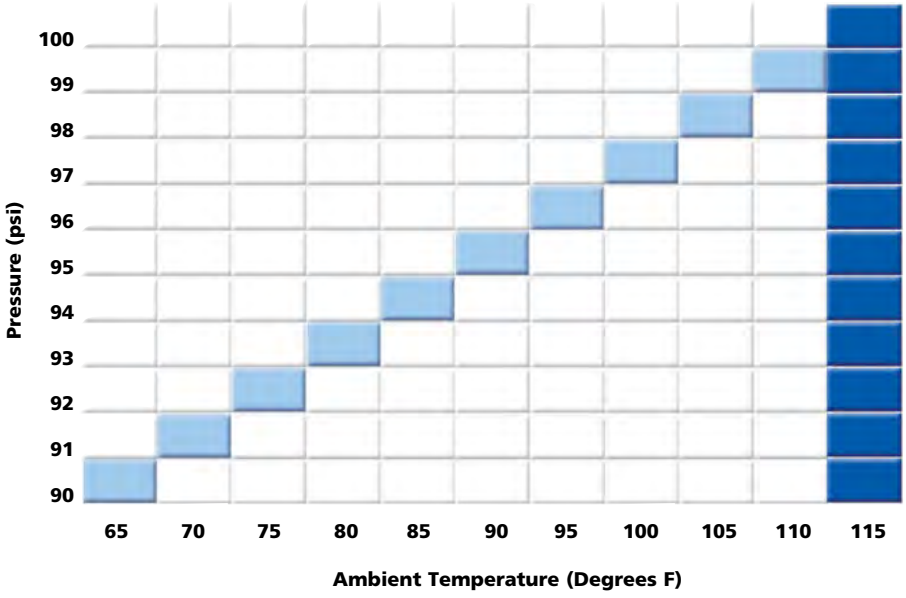

FOOTPRINT COMPARISONS TO DUAL TIRE FITMENTS

Take notice that switching to single tire fitments causes a slight reduction in footprint area when compared to dual. This will not have a negative impact on your traction.

The MICHELIN® X One® tire footprint will be dependent on pressure recommendations and vehicle loads. One should always select a pressure that will adequately support the loads your fleet encounters as defined in the MICHELIN® Truck Tire Data Book (MWL40731). Overinflation of the MICHELIN® X One® tires will not only reduce the footprint but can adversely affect handling, wear, and ride characteristics. Overinflating tires may also result in exceeding the wheel's maximum pressure.

FOOTPRINTS: MICHELIN® X ONE® XDN®2 445/50R22.5 VERSUS MICHELIN® XDN®2 275/80R22.5

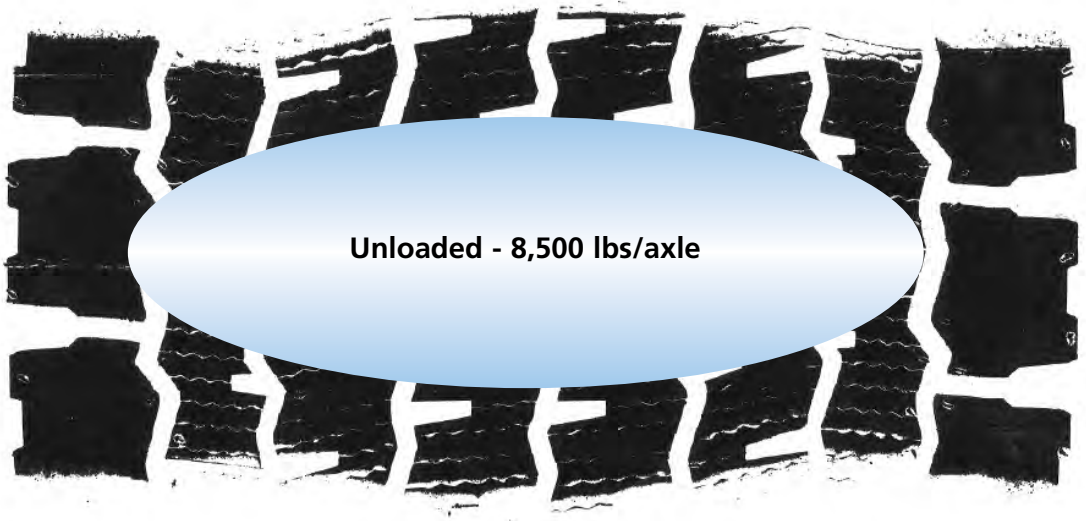

Loaded - 17,000 lbs/axle

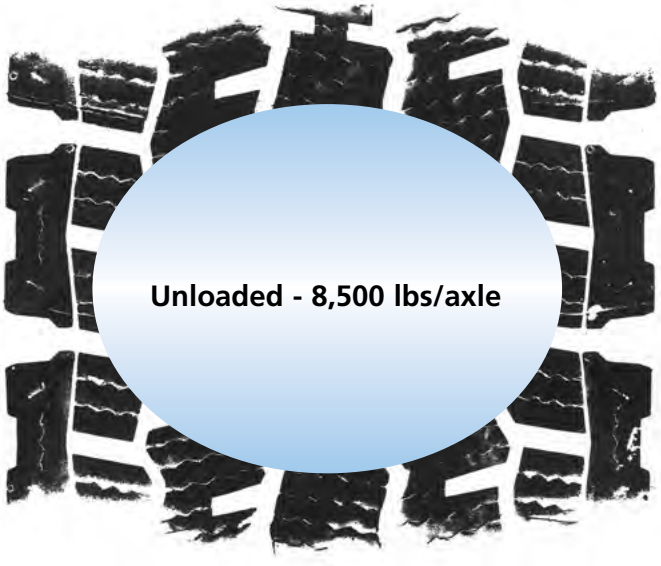

Loaded - 17,000 lbs/axle

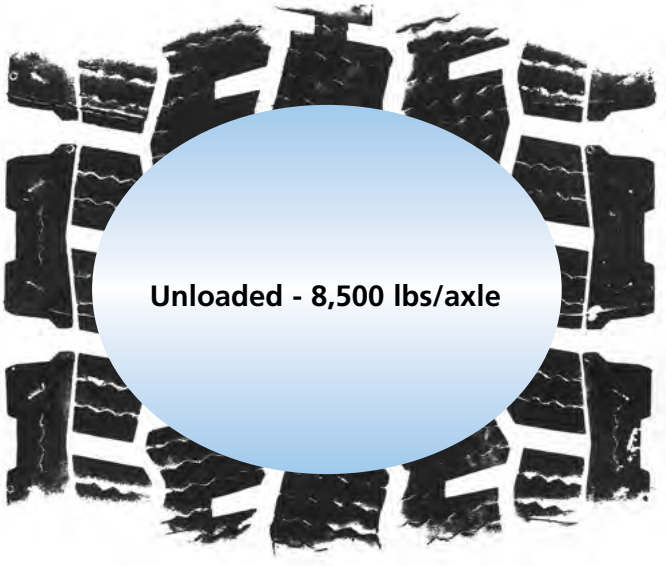

Loaded - 17,000 lbs/axle

SEALANTS – FOREIGN MATTER IN TIRES

NOTICE

Please check with Michelin prior to using sealants or compounds in any MICHELIN® tires that have sensors in them. They may adversely affect the performance of the sensors.

The use of sealants in MICHELIN® Truck Tires does not automatically nullify the warranty agreement covering the tires.

If the sealant has been tested and certified by the sealant manufacturer as being safe for use in tires, then the warranty agreement will remain in effect.

If it is determined that the sealant adversely affected the inner liner and/or the performance of the tire, then the warranty agreement may be nullified.

Please refer to the MICHELIN® Truck Tire Operator's Manual and Limited Warranty (MWE40021)for what is and is not covered by the warranty. If you have any questions, please contact Michelin at 1-888-622-2306 or refer to www.michelintruck.com for warranty information.

If foreign matter is installed in any tire, be careful not to contaminate the bead, and be sure to advise any personnel working with the tire to exercise due caution.

Deterioration from Foreign Matter Between the Wheel and Bead

TIRE INSPECTION

While checking inflation pressures, it is a good time to inspect your tires. If you see any damage to your tires or wheels, see a Michelin Truck Tire dealer at once.

Before driving, inspect your tires, including the spare, and check your pressures. If your pressure check indicates that one of your tires has lost pressure of 4 psi or more, look for signs of penetrations, valve leakage, or wheel damage that may account for pressure loss.

If the tire is 20% below the maintenance pressure, it must be considered flat. Remove and inspect for punctures or other damage. If run-flat damage is detected, scrap the tire. Refer to *TMC RP 216C/219C, Radial Tire Conditions Analysis Guide.*

Tires should be inspected for bulges, cracks, cuts, or penetrations. If any such damage is found, the tire must be inspected by a Michelin Truck Tire dealer at once. Use of a damaged tire could result in tire destruction, property damage and/or personal injury.

Equipment that has been out of service for an extended period of time should have the tires inspected for ozone damage and proper inflation. The vehicle should have some moderate operating service prior to being put in full service operation.

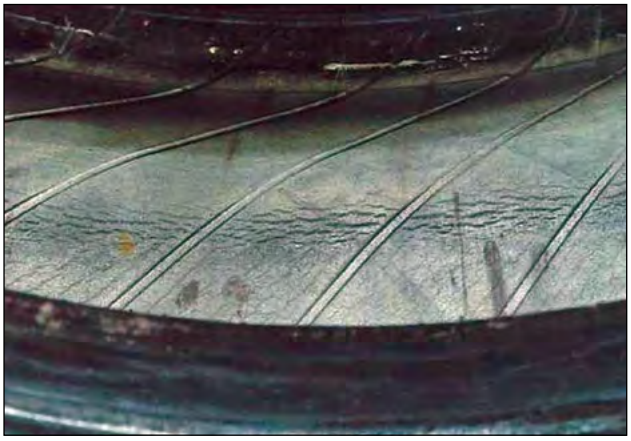

Sign of Run-flat Damage – Interior

Zipper Resulting from Run-flat Condition

Inspect for Penetrating Objects

Example of sidewall penetration that damaged interior at crown. Road hazard damages should always be inspected on the inside and not repaired from the outside.

Sidewall Abrasion

Sidewall Damage from Impact

Bead Damage

Sidewall Area Damage

AUTOMATED TIRE INFLATION SYSTEM (ATIS) OR TIRE PRESSURE MONITORING SYSTEM (TPMS)

Maintaining proper tire inflation will help maximize tire life and casing durability. This can result in reduced overall tire costs, downtime, tire replacement, irregular wear, wheel replacement, road debris, and the natural resources required to manufacture tires and retreads. Correct inflation will help increase benefits such as fuel efficiency, safety, driver retention, and uptime, all of which have a direct effect on cost per mile.

While these systems may reduce tire labor, it is still necessary to inspect tires to ensure they are serviceable, properly inflated, and the systems are working correctly. All of these systems need to be properly installed and maintained to deliver the benefits they provide.

Most of the systems on the market are capable of maintaining a cold inflation pressure within the capacity of the truck's air system. The use of these systems does not nullify the MICHELIN® Truck Tire Operator's Manual and Limited Warranty (MWE40021) unless it is determined that the system somehow contributed to the failure or reduced performance of the tire. Proper pressure maintenance is important for the optimized performance of the tires, so it is important to make sure the system can maintain the pressures needed and/or can detect accurately when the pressures are outside of the normal operating range(s) for the loads being carried. Some inflation systems will add pressure when cold weather temperature drops the psi below that which the system is calibrated for, resulting in a pressure higher than the target setting. For example, a 40 degree temperature drop will reduce pressure readings by 6 to 8 pounds psi, thus the inflation system will increase the pressure above the target by a like amount. Tires on vehicles with these systems should still be gauged weekly and cold pressure adjusted if necessary.

Michelin does not and cannot test every system that is being marketed/manufactured for effectiveness, performance, and durability. **It is the responsibility of the system manufacturer to ensure that the tires are inflated as rapidly as possible to the optimal operating pressure in order to prevent internal damage to the tires.** In view of the increasing promotion for the use of pressure monitoring and/or inflation systems, Michelin strongly urges the customer to put the responsibility on the system's manufacturer to prove and support their claims. Please refer to the MICHELIN® Truck Tire Operator's Manual and Limited Warranty (MWE40021) for a general discussion of what is and is not covered by the warranty.

Systems on trailers can sometimes allow slow leaks caused by nails or other small objects penetrating the crown area of the tire to go undetected. A slow leak can be compensated for by the inflation system. The warning light of the Automated Tire Inflation System (ATIS) will only come on if the pressure in the tire drops below a certain percent (usually 10%) of the regulated preset pressure. Even when the pressure drops below this point, the light will go off if the system is able to restore and maintain the preset pressure.

If you have any questions, please contact Michelin Consumer Care at 1-888-622-2306.

DRIVE CAREFULLY

All tires will wear out faster when subjected to high speeds as well as hard cornering, rapid starts, sudden stops, and frequent driving on surfaces that are in poor condition. Surfaces with holes and rocks or other objects can damage tires and cause vehicle misalignment. When you drive on such surfaces, drive on them carefully and slowly, and before driving at normal or highway speeds, examine your tires for any damage, such as cuts or penetrations.

TREAD DEPTH MEASUREMENTS

Tires should be measured for wear. This measurement can be taken in several spots across the tread and around the circumference. However, to calculate the remaining amount of rubber (knowing the new tire tread depth) for a given number of miles run, the measurement should always be taken at the same spot on the tread and should be taken close to the center of the groove, in order to not get a false reading due to the radius of the groove bottom, as shown below.

WEAR BARS

MICHELIN® truck tires contain "wear bars" in the tread grooves of the tire tread, which show up when only 2/32nds of an inch or less of tread remains. Tread depths should not be taken on the wear bar indicators. When the tread is worn level with the wear bar indicators (from either even or irregular wear), the tire must be removed from service. Federal law requires that "any tire on the front wheels of a bus, truck, or truck tractor shall have a tread groove pattern depth of at least 4/32 of an inch when measured at any point on a major tread groove. The measurements shall not be made where tie bars, humps, or fillets are located."

DO NOT OVERLOAD

The maximum load that can be put on a truck tire is dependent upon the speed at which the tire will be used. Consult a Michelin Truck Tire dealer or the application data books for complete information on the allowable loads for application. Tires that are loaded beyond their maximum allowable loads for the particular application will build up excessive heat that may result in sudden tire destruction, property damage, and personal injury.

Some states have enacted "Load Per Inch Width" regulations for the purpose of governing axle weight on (primarily) the steering axle of commercial vehicles. These regulations provide a carrying capacity of a certain number of pounds per each cross-sectional inch (unloaded) across the tire's width. The determination of the tire's width can vary from state to state but presumably would be based upon either the tire manufacturer's published technical data for overall width or the width as marked on the sidewall of the tire (which may require conversion from Metric to English units). It is recommended to contact your state's DOT office to confirm the current Load Per Inch Width Law.

For example, if a state allows for 550 pounds per inch width, a tire marked 11R22.5 could carry up to 6,050 pounds (11 x 550) or a total of 12,100 pounds on the steer axle (2 x 6,050). Another way to look at it is to take the total weight carried and divide by the stated Inch Width Law to determine the appropriate size tire. If a commercial front end loader (sanitation vehicle) wants to carry 20,000 pounds in a state with a 600 pound per inch width limit (20,000/600 = 33.3), you would need a tire that is at least 16.7 inches wide (33.3/2). In this case a 425/65R22.5 could legally carry the load (425/25.4 = 16.7 inches Metric to English conversion).

The two formulas are:

– Load Per Inch Width Law x tire section width x number of tires = gross axle weight limit
– Gross axle weight / Inch Width Law / number of tires = minimum tire section width needed

Do not exceed the gross axle weight ratings (GAWR) for any axle on the vehicle.

Do not exceed the maximum pressure capacity of the wheel. Consult the wheel manufacturer in these cases.

DRIVE AT PROPER SPEEDS

The maximum continuous speed at which MICHELIN® truck tires can be operated is indicated in the MICHELIN® data books. See Section Ten, Appendix under Publications, Videos, and Websites (Page 186-187) for complete listings of the MICHELIN® data books. This speed varies for each type of tire and depends on the type of application. Consult Michelin Consumer Care (1-888-622-2306) for assistance in determining the maximum speed for your application. Exceeding this maximum speed will cause the tire to build up excessive heat that can result in sudden tire destruction, property damage, and personal injury. In any case, legal speed limits and driving conditions should not be exceeded.

High speed driving can be dangerous and will likely damage your tires.

When driving at highway speeds, correct inflation pressure is especially important. However, at these speeds, even with correct inflation pressures, a road hazard, for example, is more difficult to avoid. If contact is made, it has a greater chance of causing tire damage than at a lower speed. Moreover, driving at high speeds decreases the time available to avoid accidents and bring your vehicle to a safe stop.

BALANCE AND RUNOUT

It is customary to check tire and wheel assembly balance if the driver makes a ride complaint. Before removing the tire and wheel assembly from the vehicle, check for radial and lateral runout. Bent wheels, improper mounting, or flat spotting can cause excessive runout. If balance is still required, a simple static balance with bubble balancer or a wall mounted axle bearing and hub type gravity balancer should be sufficient. See Section Ten, Appendix for Runout and Vibration Diagnosis on Pages 176-178.

Current Technology & Maintenance Council (TMC) limits from *TMC RP 214D, Tire/Wheel End Balance and Runout*, are listed in the tables below.

TABLE A:
RECOMMENDED BALANCE AND RUNOUT VALUES FOR DISC WHEELS AND DEMOUNTABLE RIMS

		Balance (See Note 2)	Radial Runout (See Note 3)	Lateral Runout (See Note 3)
Tubeless Steel Disc Wheels		6 oz. max	0.070 inch max	0.070 inch max
Tubeless Aluminum Disc Wheels		4 oz. max	0.030 inch max	0.030 inch max
Tubeless Demountable Rims		N/A	0.070 inch max	0.070 inch max
Wide Base Wheels	Steel	(See Note 1)	0.075 inch max	0.075 inch max
	Aluminum	(See Note 1)	0.030 inch max	0.030 inch max

Note 1: Refer to the manufacturer's specifications for balance and runout values.
Note 2: Amount of weight applied to rim to balance individual wheel component.
Note 3: For steel wheels, the area adjacent to the rim butt weld is not considered in runout measurements.

TABLE B:
TIRE/WHEEL ASSEMBLY BALANCE AND RUNOUT LIMITS

	Tire Positions	19.5 Tire/Wheels	Over The Road Applications	On/Off-Road Applications	Wide Base Tire/Wheels
Maximum total external weight correction expressed in ounces of weight required to correct a rim diameter per rotating assembly	Steer	12 oz.	14 oz.	16 oz.	22 oz.
	Drive/Trailer	16 oz.	18 oz.	20 oz.	26 oz.
Lateral runout for rotating assembly	Steer	0.095"	0.080"	0.110"	0.125"
	Drive/Trailer	0.125"	0.125"	0.125"	0.125"
Radial runout for rotating assembly	Steer	0.095"	0.080"	0.110"	0.125"
	Drive/Trailer	0.125"	0.125"	0.125"	0.125"

Note: If tire and wheel assembly is within these limits and ride problem still exists, refer to *TMC RP 648, Troubleshooting Ride Complaints*.

CARE, CLEANING, AND STORAGE

STORAGE

All tires should be stored in a cool dry place indoors so that there is no danger of water collecting inside them. Serious problems can occur with tube-type tires when they are mounted with water trapped between the tire and tube. Under pressurization, the liquid can pass through the inner liner and into the casing plies. This can result in casing deterioration and sudden tire failure. Most failures of this nature are due to improper storage. This is a particular problem with tube-type tires because of the difficulty in detecting the water, which has collected between the tire and tube. When tires are stored, they should be stored in a cool place away from sources of heat and ozone, such as hot pipes and electric motors. Be sure that surfaces on which tires are stored are clean and free from grease, gasoline, or other substances that could deteriorate the rubber. Tires exposed to or driven on these substances could be subject to sudden failure.

STACKING OF MICHELIN® X ONE® TIRES

Stacking MICHELIN® X One® tires too high could result in a safety issue and/or could possibly damage the bottom tires.

New MICHELIN® X One® tires should never be stacked higher than 3 meters (approximately 10 ft). This will allow the stacking of up to 6 new tires depending on the dimension.

For used and/or damaged MICHELIN® X One® tires stacking them more than 5 high may pose a safety concern.

FLOOD DAMAGE

Tires that have been subjected and exposed to water from hurricanes, storms, floods, etc. for a substantial amount of time need to be discarded and not placed in service on consumer's vehicles. This applies to both new tires (unmounted) in inventory as well as those already mounted and installed on vehicles. Prolonged exposure to moisture can have a degenerative chemical effect on rubber and lead to potential failure later in the tire's life. If any questions arise, contact Michelin Consumer Care at 1-888-622-2306.

CLEANING AND PROTECTION

Soap and water is the best solution to cleaning tires. If you use a dressing product to "protect" your tires from aging, use extra care and caution. Tire dressings that contain petroleum products, alcohol, or silicone will cause deterioration and/or cracking and accelerate the aging process. Be sure to refer to the protectant or dressing label contents to confirm that none of these harmful chemicals are present.

In many cases, it is not the dressing itself that can be a problem, but rather the chemical reaction that the product can have with the antioxidant in the tire. Heat can make this problem worse. When these same dressing products are used on a passenger car tire that is replaced every 3 to 4 years, it is rare to see a major problem. In many cases, truck tires may last much longer due to higher mileage yields and subsequent retread lives, and the chemical reaction takes place over a longer period.

DIESEL FUEL CONTAMINATION

Diesel fuel and other petroleum-based products can cause blistering, swelling, or a spongy condition. Swelling is typically seen in the tread, and blistering is typically seen on the sidewall. The odor of the petroleum-based product may be evident. The rubber will also be softer than another part of the tire with no petrol damage. Generally it may be 30-40 points softer on the shore hardness gauge. If these conditions are seen or experienced, scrap the tire.

Swellings in the Tread

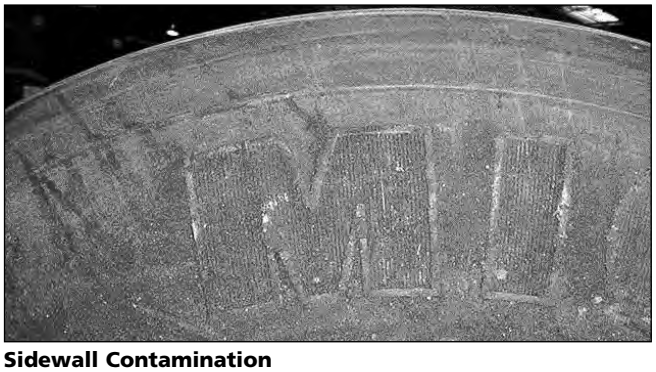

Sidewall Contamination

CHAINS*

In order to satisfy legal requirements in many states, you may be required to use chains on truck tires. When the use of chains is required, the following recommendations should be followed:

1. Chains should only be utilized when necessary. The possibility of damage to the tire from the chains will increase as driving speed and length of travel increase, as well as with use on dry pavement. As a general rule, chains should be utilized only as long as required, and vehicle speeds should be kept relatively low.

2. Since manufacturers have size recommendations for radial ply tires, no matter what type of chain they manufacture, these size recommendations must be adhered to for optimized utility and performance.

3. Always be sure to check for proper clearances between chain and vehicle at the lower 6:00 o'clock position where the tires deflect due to load. When using tire chains, a minimum of two inches of space clearance between the dual assembly and the vehicle is necessary.

4. Also follow closely the mounting instructions and procedures of the chain manufacturer.

5. Specific chains are available for the MICHELIN® X One® tire product line.

* The information provided is for reference only. Chain-specific questions should be directed to the chains manufacturer.

TIRE DAMAGE RESULTING FROM NON COMPLIANT RUNFLAT/BEADLOCK DEVICES

The purpose of this bulletin is to inform end users of the potential for damage from the use of non compliant devices in tire wheel assemblies.

Any device installed inside of a tire/wheel assembly, such as runflat and beadlock devices, must not damage the interior surfaces of the tire during normal operation of the tire wheel assembly.

Metal, hard plastic, or other non-compliant materials will create damage to the interior surfaces of the tires when used in off road and/or reduced inflation pressure operations of the tire wheel assembly. These damages (as illustrated in the photographs below) will lead to the tire's early removal from service, and can result in sudden, catastrophic failure of the tire.

Damage created by these devices is not a warrantable condition. Further, these damages may cause the tire to unexpectedly lose it's capability to retain inflation pressure. Tire failure may or may not be preceded by bulges, knots, or blisters on the exterior surfaces of the tire. If a tire exhibits bulges, knots, or blisters it should be immediately deflated, removed from service and discarded.

The inclusion of any device or substance inside the air chamber of a tire/wheel assembly has the potential to create damage to the tire, please refer to the MICHELIN® Truck Tire Operator's Manual and Limited Warranty (MWE40021) for a general discussion of what is and is not covered by the warranty.

For additional information, please contact your local Michelin sales representative or contact Michelin using the website at www.michelintruck.com.

RECOMMENDATIONS FOR THE USE OF DYNAMOMETERS

SEVERE DAMAGE can result in the crown area of radial truck tires when run on dynamometers for extended periods. Quite often the damage is internal and not discovered until after the vehicle has been put back in service.

In order to avoid the possibility of damaging MICHELIN® radial truck tires, adhere to the following time/speed restrictions and related test parameters. This applies to tire sizes with bead seat diameters of 19.5, 20, 22, 22.5, 24, and 24.5 inches.

NOTE: The times for the indicated speed in the chart are not additive.

Speed (mph)*	MAXIMUM TIME (MINUTES)	
	On 8 5/8" Dia. Rollers	On 18-20" Dia. Rollers
62 (Max.)	2.5	4
50	3.5	6
40	5	8.5
30	7.5	14
20	16	35
10	42	105

*Exceeding the legal speed limit is neither recommended nor endorsed.

Note that in the above speed/time table a significant increase in time is allowed on the 18-20" versus the 8-5/8" diameter roller. For example, at 30 mph time almost doubles from 7.5 minutes to 14 minutes.

- Allow a two-hour cool-down between tests.
- These limits are for an empty vehicle with tire pressures as indicated on the tire sidewall for maximum load.
- Allow a one-hour cool-down after each test before loading vehicle.

The maximum allowable center-to-center distance between the two rollers in contact with a tire is a function of the sum of tire and roller diameter.

	MAX. ROLLER SPACING		
Tire Size	Tire O.D.	8-5/8" Dia.	18" Dia.
275/80R22.5 XZE	40.2"	28"	33.5"

This relationship is shown below:

$$\text{Maximum Roller Spacing} = \frac{\text{Tire Diameter} + \text{Roller Diameter}}{2} \times 1.15$$

For example using 8-5/8" diameter:

$$\frac{40.2" + 8.625}{2} \times 1.15$$

$$= \frac{48.825}{2} \times 1.15$$

$$= 24.4125" \times 1.15$$

$$= 28.07"$$

⚠WARNING

If these times and/or speeds are exceeded, internal damage in the tire could result, leading ultimately to tire destruction, personal injury or death.

SPINNING

Major tire damage can occur in a short period of time when a tire spins on a surface at high speeds. When the speed difference between the wheel with good traction and the wheel without becomes too great, the tire begins to disintegrate. This can occur on any slick surface (such as ice, mud, and snow) or on a dry surface where there is a variance in traction. The resulting difference in speed of the assembly can be as high as 4 times the registered speed indicated, resulting in tire and/or differential damage on the vehicle.

ROTATION

MICHELIN® radial tires should be rotated when necessary. If the tires are wearing evenly, there is no need to rotate. If irregular wear becomes apparent or if the wear rate on the tires is perceptively different (from axle to axle for drive tires and side to side for steer tires), then the tires should be rotated in such a manner as to alleviate the condition. There is no restriction on criss-cross rotation, including directional steer tires that have worn 50% or more of the original tread.

When rotating tires, the following points should be taken into consideration:

- The load carried by a particular tire in a particular position. The inside tire of a dual mounting carries more load than the outside tire on the same axle.
- Adjacent dual tires should not differ more than 1/4" diameter (4/32" tread wear). If there is a difference in tread wear, fit the least worn tire in the outside position.
- Curbing on dual applications often damages tire sidewalls. If so, rotate the wheel and tire to the inner wheel position.
- Often it is beneficial to rotate the tires so that irregularly worn tires are moved to a position where they are turning in a direction opposite the original position.

Rotation procedures such as those recommended by vehicle manufacturers and those included in *TMC RP 642B, Total Vehicle Alignment Recommendations for Maximizing Tire and Alignment Related Component Life* may be followed.

Note Directional Tires: When mounting any new directional tire, ensure directional arrow points toward the direction of travel during the original 50% of tread life. Directional casings that have been removed from service and retreaded should be considered non-directional tires.

SIPING

There is no reason to 'sipe' new MICHELIN® tires. Michelin incorporates siping as needed in its designs to enhance tire performance. Experience suggests degradation in tread wear, vehicle ride and handling, and tire durability may be caused by poor or improper tire tread siping. Drive tires (M/S) are optimized to provide desirable traction in dry, wet, snow, and icy conditions. Siping does not automatically affect the MICHELIN® warranty* that covers workmanship and material. However, if a tire fails or is rendered unserviceable as a result of 'siping,' the tire is not warrantable.

*See warranty for details.

BRANDING

1. The following limits apply when branding MICHELIN® truck tires using equipment without accurate temperature control or which may exceed 465°F (240°C). (*Hand-held equipment is typically used for this "HOT BRANDING."*)
   a. Brand Temperature/Maximum Depth
      570°F (300°C) 1/64 inch (0.4 mm)
      480°F (250°C) 1/32 inch (0.8 mm)
   b. Only brand in the "BRAND TIRE HERE" area.
2. For equipment capable of "COLD BRANDING," i.e., controlled temperatures below 465°F (240°C), the following restrictions apply:
   a. Temperature — Maximum 465°F (240°C)
   b. Contact pressure — Maximum 100 psi
   c. Time of contact — Maximum 1 minute
   d. Character Height — Maximum 1 inch
   e. Character Depth — Maximum 0.040 inch (1.0 mm)
   f. Location:
      Circumferentially — in the "BRAND TIRE HERE" area.
      Radially — in the "BRAND TIRE HERE" area with no portion of any character extending more than 1 inch above the outline of the area.

MAINTAINING THE VEHICLE

Many tire problems can be traced to mechanical conditions in the vehicle. Therefore, to obtain maximized tire performance, vehicles must be properly maintained.

MAJOR VEHICLE FACTORS WHICH AFFECT TIRE LIFE:

ALIGNMENT

Alignment refers not only to the various angles of the steer axle geometry, but also to the tracking of all axles on a vehicle, including the trailer. The dual purpose of proper alignment is to minimize tire wear and to maximize predictable vehicle handling and driver control. Toe misalignment is the number one cause of steer tire irregular wear, followed by rear axle skew (parallelism or thrust). One of the challenges of meeting this goal is that alignments are typically performed on a static, unloaded vehicle sitting on a level floor. The vehicle then operates over varying contoured surfaces, under loaded conditions, with dynamic forces acting upon it. Predicting the amount of change between static/unloaded/level - versus – dynamic/loaded/contoured is difficult because many variables affect the amount of change. Variables such as Steering System Compliance (i.e. "play") must be considered in making alignment setting recommendations.

All of these misalignment conditions may exist alone or (more likely) in combination with other misalignment conditions. Sometimes it is these interactions that produce the outcomes that are especially undesirable. As an example, a tire running at slightly negative camber may perform especially badly if it is also subjected to tandem thrust misalignment. The conceptual understanding for this phenomenon is that because of the camber issue, the wear burden imposed by the thrust misalignment is not being shared equally by the entire tread surface. Further, a tire that is being operated in a misaligned condition may well transmit forces into the suspension from its interaction with the road. Some suspension systems manage those forces favorably. Others react in a way that imposes motions in the tire that are very unfavorable to the tire's ability to yield a favorable wear outcome.

- Tires that are not operated at a normal (perpendicular) angle to the road surface typically produce uneven tire wear. Tires that are fighting each other (because of conflicting alignment operating angles) produce unfavorable and sometimes irregular tire wear. Tires that are fighting each other due to highly compliant suspension components (compression/extension in the bushings or joints, or deflection of solid parts) will likely produce irregular wear forms.
- Alignments should be performed carefully using best alignment practices. (For example, ensuring that the suspension is at the correct ride height and that the suspension has been settled out by being moved forwards/backwards, etc.)
- Alignments should be conducted in the most representative loading condition and ride height for the expected usage.

We therefore recommend referring to *TMC RP 642B, Total Vehicle Alignment Recommendations for Maximizing Tire and Alignment Related Component Life*, which has established industry recommended target values for the alignment of vehicles.

STEER AXLE GEOMETRY

Since very few vehicles continue to use Center Point Steering, the following recommendations are based on the more common Inclined Kingpin Steer Axle Geometry.

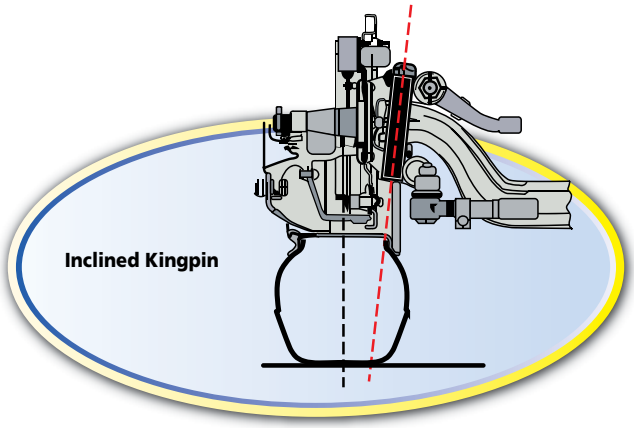

TOE

Toe is typically the most critical alignment condition affecting steer axle tire wear. The purpose of setting toe at a given specification is to allow the tire to run straight during normal operating conditions. Too much toe-in results in scrubbing from the outside inward on both tires, and too much toe-out results in scrubbing from the inside outward on both tires.

Total toe is the angle formed by two horizontal lines through the planes of two wheels. Toe-in is when the horizontal lines intersect in front of the wheels or the wheels are closer together in front than in back. Toe-out is when the horizontal lines intersect behind the wheels or the wheels are closer together in back than in front. Toe-in is commonly designated as positive and toe-out as negative.

Steer axle toe is adjustable to reduce wear to the leading edge of the tire and also to avoid road wander. Toe is adjusted in a static, unloaded condition so that the tires will run in a straight line under a dynamic, loaded condition.

The toe measurement will probably change from unloaded to loaded condition. The amount of change will vary with axle manufacturer, axle rating, and steering arm geometry; but it is still fairly predictable. Front axles on most popular Class 8 long haul tractors will change in the direction of toe-out about 1/32" (0.8 mm or 0.05 degree) for each 1000 pounds of load increase on the steer axle. Cabover tractors with set-back-front-axles typically experience less steer axle change in load from bobtail to loaded than do other configurations. Wheelbase and fifth wheel location are also major factors affecting how much load change the steer axle will experience.

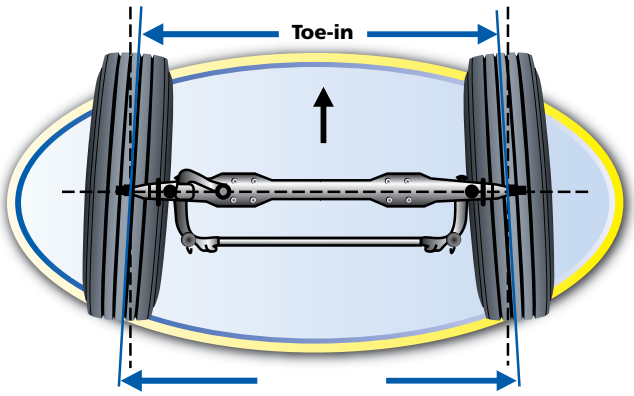

Note: Additional consideration would be effects of air ride suspension systems, rack and pinion systems, and disc air brakes on steer tire wear.

A misaligned (dog-tracking) trailer may also be the cause of steer tire wear.

See Section Ten, Appendix under Conversion Table on Page 163 for conversion of fractions in inches to millimeters and degrees. See Section Ten, Appendix under Alignment on Pages 164-167 for a field method for verification.

TANDEM AXLE PARALLELISM (SKEW - THRUST)

Tandem axle parallelism is critical because it can have a detrimental effect on all ten tires on the tractor. Non-parallel drive axles tend to push the tractor into a turn in the direction that the axle ends are closest. In order for the vehicle to go straight, the driver must correct by steering in the opposite direction. The vehicle can then go straight, but all ten tires are at an angle to the direction of travel, causing scrubbing. Excessive tandem axle non-parallelism is usually detected in steer tire wear. If one steer tire is scrubbing from the outside inward and the other steer tire is scrubbing from the inside outward, then tandem axle alignment is suspect. A similar pattern can be generated by the driver's compensation for a non-lubricated 5th wheel or from a dog tracking trailer. This should not be confused with a light level of toe-in on the right front and lighter toe-out wear on the left front that may be the result of secondary highway road crown.

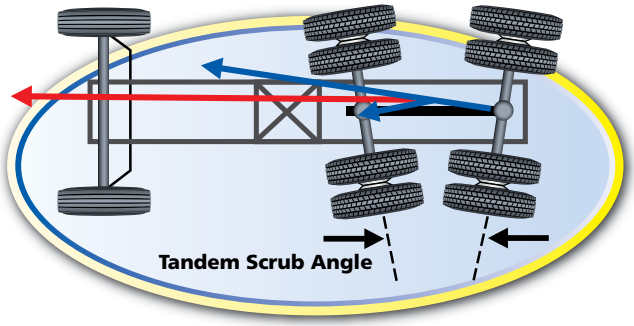

THRUST ANGLE (TRACKING)

The relationship of the geometric centerline of the vehicle and the direction that the axle points generates a thrust angle. Ideally this relationship would result in a 0 degree value when the axle centerline is perpendicular to the geometric centerline. However, any deviation from this setting will increasingly cause the vehicle to travel away from the straight line, causing the tires to "dog track" and scrub. Tracking to the right generates a positive thrust angle; tracking to the left creates a negative thrust angle.

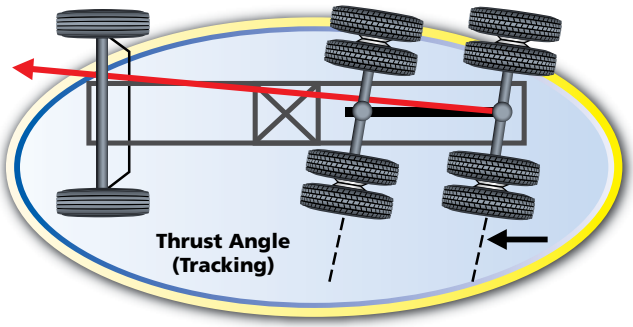

CAMBER

Camber is the angle formed by the inward or outward tilt of the wheel referenced to a vertical line. Ideal camber may vary in different applications and in different axle positions as affected by load distribution (i.e. front axle variance of 6,000 to 12,000 pounds, drive axle range of 8,000 to 17,000 pounds, and trailer axle range of 4,000 to 20,000 pounds).

- Camber is positive when the wheel is tilted outward at the top.
- Camber is negative when the wheel is tilted inward at the top.
- Excessive positive camber may cause smooth wear on the outer half of the tire tread.
- Excessive negative camber may cause wear on the inner half of the tread.
- Camber only causes a noticeable "pull" if on the steer axle the right and left wheel camber angles are not very close in magnitude (greater than 1/2 degree).
- Negative camber can also be a cause of inside shoulder wear on trailer axle in dual or single configuration.
- A free-rolling tire is more sensitive to camber than a tire twisting or turning under the effect of torque.
- A wide tire with a relatively low aspect ratio is more sensitive to camber than a narrow high aspect ratio tire.
- Generally, the vehicle will pull to the side with the most amount of positive camber.

Camber is often a contributor to wear occurring on the interior ribs/blocks of the inner dual drive tires and can sometimes affect the interior ribs/blocks of the outer dual as well.

Steer position: Steer axles (which are generally, but not always, a forged axle) are designed with static unloaded positive camber and tend to produce better tire wear when provided with slightly negative camber due to the effects of cornering forces, load transfer, and steering Ackerman geometry, which tend to stress and produce outside shoulder wear during turning maneuvers. In the interest of more even overall wear, it is therefore advantageous to let the wear be biased toward the inside shoulder (via slightly negative camber) during straight ahead driving.

Drive position: Generally, camber is not a major contributor to drive axle irregular wear, although combined with dual position toe-in or toe-out may cause the onset of a wear pattern.

Trailer position: Trailer axles are typically fabricated from steel tubing with spindles welded to the ends. They are usually built straight, so there will be some negative camber induced when installed under a trailer. Additional loading of the trailer will cause additional negative camber. Most trailer axles deflect to about -0.5 degree camber at 17,000 pounds per axle loading.

Camber can accelerate shoulder wear on dual or single tires. Higher degrees of negative camber will show up on the inner shoulder, and positive camber on the outer shoulder. Wide single tires seem more susceptible to camber induced wear.

Camber correction by bending axles is NOT RECOMMENDED by axle manufactures, nor endorsed by Michelin. Consult the axle manufacturer if camber is found to be incorrect (outside manufacturer specification).

CASTER

Positive (+) caster is the backward tilt at the top of the kingpin when viewed from the side. Negative (-) caster is the forward tilt at the top of the kingpin when viewed from the side.

The purpose of caster is to provide self-aligning forces on the steer tires to stabilize the vehicle when driving straight down the road under braking, free wheeling, and power conditions.

Insufficient caster reduces stability and can cause wander. Excessive caster increases steering effort and can cause shimmy. Either of these conditions may also have a detrimental effect on tire wear. Excessive caster beyond the vehicle manufacturer's specification may result in induced camber causing excessive tire wear, particularly fleets that are in local and regional operations. Caster is adjustable with shims. Adjusting only one side is not recommended. Caster on both sides should be equal or not more than 1/2 degree difference. Generally, the vehicle will pull to the side with the least amount of positive caster.

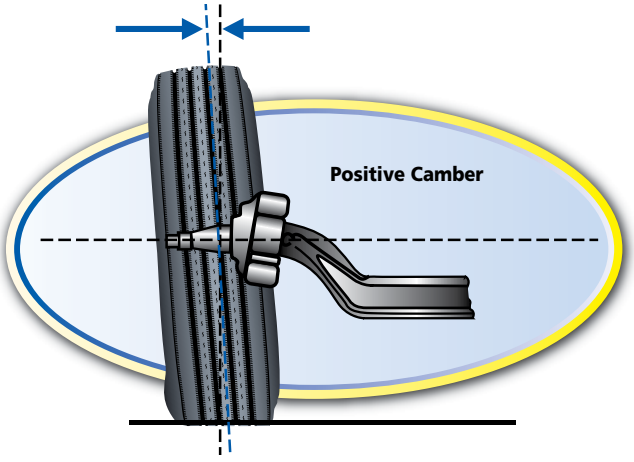

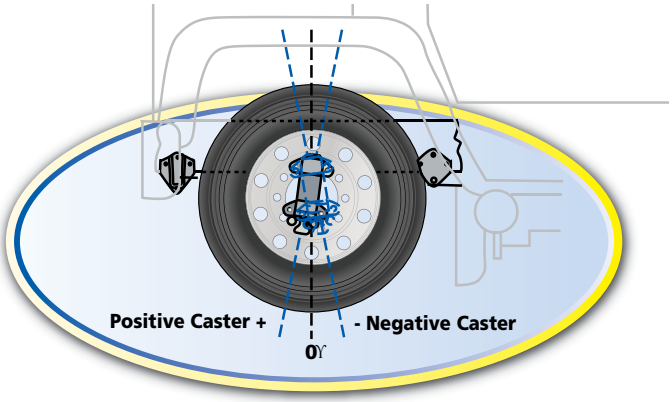

STEER AXLE SETBACK (STEER AXLE SKEW)

Any measured deviation left (negative) or right (positive) away from perpendicular to the centerline of the vehicle is called the setback.

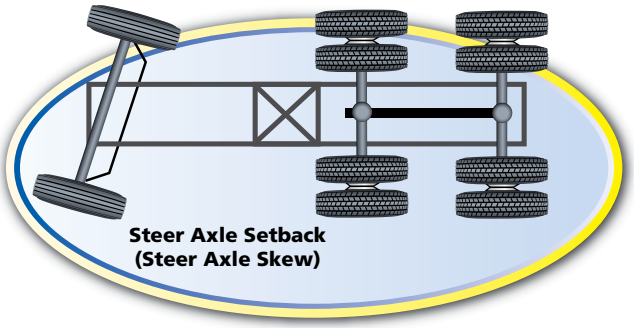

TOE-OUT-ON-TURNS (TURNING RADIUS)

Toe-out-on-turns is the difference in the arcs described by the steering tires in a turn. The purpose is to prevent the inside tire from scrubbing around a turn since the outside tire (loaded tire) determines the turning radius of the steer axle. This is the Ackerman Principle. Improper geometry results in wheel scrub in turns, which generally appears as toe wear on the tire. More specifically, Ackerman wear shows itself as a rounded edge radial feather wear across the tread area of the tire. This angle is more important on a city vehicle with its many turns than on a line haul unit.

Ackerman geometry is dependent upon the steering axle track-width and wheel base of a vehicle. When the turning angle or wheel base changes from the original specification, Ackerman is affected.

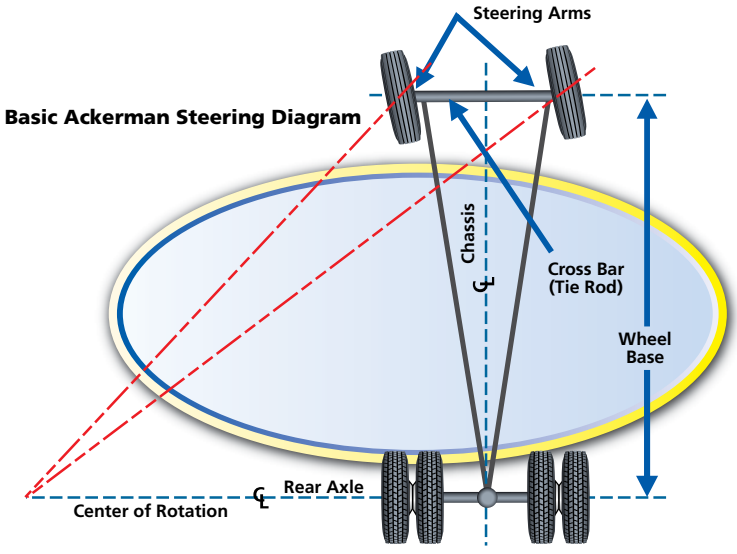

TMC RECOMMENDED ALIGNMENT TARGETS

(Value representing industry-established midpoint.)
For more information refer to *TMC RP 642B, Total Vehicle Alignment: Recommendations for Maximizing Tire and Alignment-Related Component Life.*

Alignment Specification (1)	Target Value (2)
Steer Axle	
Total Toe	+1/16 inches (0.08 degrees, 0.06 inches, 1.5 mm)
Camber	Less than 1/4 degree (3)
Caster	Left: +3.5 degrees; Right: +4.0 degrees
Setback	0 degrees / 0 inches
Drive, Trailer, and Dolly Axles	
Thrust (Square)	0 degrees / 0 inches
Scrub (Parallelism)	0 degrees / 0 inches
Lateral Offset	0 inches

(1) All specifications are measured with vehicle in static, unladen condition.
(2) All specifications are stated in inches or degrees (where applicable).
(3) Camber angle changes normally involve bending the axle beam, which may void the axle manufacturer's warranty. If the measurement exceeds this value consult the vehicle, axle, and/or alignment equipment manufacturer.

PERIODIC ALIGNMENT CHECKS

An aggressive alignment preventative maintenance program should include the following periodic checks:

1. Upon delivery of new vehicles. Even though OEMs make a concerted effort to properly align vehicles at the factory, shifting and settling can occur during delivery. Camber and caster may not change much, but toe and tandem axle parallelism may change sufficiently to set up undesirable tire wear patterns if not corrected upon receipt.

2. At the first maintenance check. Post break-in alignment checks should be done between 15,000-30,000 miles, but no later than 90 days after the first in-service date. If shifting and settling did not occur during delivery, it may occur during the first few thousand miles of operation. Many OEMs recommend verification of torque on suspension/frame components after a few thousand miles of operation. A thorough alignment check should be made during this inspection (after torque verification). Consideration should be given to different torque requirements on metric and standard bolts.

3. When new steer tires are installed or front-end components are replaced. The steer tires coming out of service can tell a story of good or bad alignment. With this feedback, an alignment program can continue to improve. Without feedback, the best an alignment program can do is stay at its current level.

4. When tire wear indicates a concern. "Reading" tire wear can help identify alignment issues. Unfortunately, correcting the alignment does not necessarily correct the tire wear pattern once an undesirable wear pattern has been established.

ALIGNMENT EQUIPMENT

Alignment equipment exists that ranges from simple and inexpensive to sophisticated and costly. One factor that is common to all types of alignment equipment is that the person using it is extremely important to the resulting tire and vehicle performance! Calibration is another critical factor in maintaining the accuracy of the system – follow manufacturers' recommendations. Some fleets have obtained excellent results with a good "scribe and trammel bar" and paying strict attention to toe and axle parallelism. Other fleets establish permanent records, make adjustments more easily, have more information for trouble-shooting, and obtain excellent results with the more expensive equipment. The common ground is that the person using the equipment understands it, uses it properly, and follows the procedures consistently.

Michelin developed the BibAlignment System as a very simple, accurate, and repeatable method of establishing the position of a vehicle's axles relative to each other. Through the use of a computer program, the highly portable and cost-effective BibAlignment System calculates the corrections necessary to improve the vehicle's axle parallelism. It locates the centerline of drive and trailer axles and projects this centerline to the ground. These points are measured, recorded, and entered into the computer program. The resulting data concerning the axle alignment and recommended corrections may be printed for historical reference. Contact your local Michelin Representative for ordering information.

Heavy truck alignment has evolved to a precise science. The "field check" techniques below may be used to detect a problem condition but are not recommended for making adjustments/corrections. Proper alignment equipment should be used if a decision is made to complete this service.

FIELD CHECK TECHNIQUES

TOE: This wear on the tread occurs due to the shearing action created by side forces resulting from excessive toe-in or toe-out. If the toe is properly set, the steer tires will feel even and smooth when you move your hand across the tread surface. If the front tires have excessive toe-in, a feathering wear will be created. This can be felt very easily with your hand. The tread will feel smooth when you move your hand in across the tire, but you will feel a drag or resistance when you move your hand back out across the tread. If the front tires have excessive toe-out, the opposite will be evidenced. The resistance will be felt going across the tread, with no resistance felt while being withdrawn. A simple Rule of Thumb to remember when analyzing steering tire wear is "Smooth In" means Toe-In; "Smooth Out" means Toe-Out.

A quick field check procedure is done on elevated, dry tires, and with a can of spray paint or marker, highlight a section of the tread area around the tire. With a sharp pointed scribe, mark a thin line in the highlighted area while rotating the tire. Repeat this process on the other steer tire. Lower the vehicle on folded plastic bags. Once the steer tires are down, bounce the truck to make sure the suspension is relaxed, and verify that the wheels are pointing straight ahead. Then measure from side to side between the scribed lines, first rear, then front, with a tape measure or a fine-lined toe gauge to determine relative toe. Subtract front from rear: positive result indicates toe-in, negative is toe-out. See Section Ten, Appendix under Alignment – Field Method (Pages 166-167) for complete procedures.

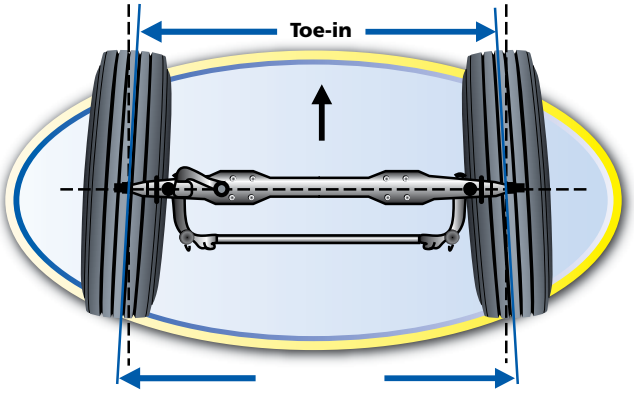

Parallelism: On a tractor with tandem drive axles, the two axles should be parallel to one another. Any deviation from this parallel position will create a tandem skew or scrub angle. This angle should be no larger than one tenth of a degree. An easy method of checking this angle is to measure the distance between the ends of the axle hubs on each side of the tractor. The difference between these two measurements should be no larger than 1/8 inch for a tandem tractor/truck and no larger than 1/16 inch on a tandem axle trailer. The easiest way of accomplishing this measurement is by using a trammel bar. The pointers on the trammel bar must fit in the axles' centering holes on both sides of the vehicle.

For example, if the ends of the drive axles on the left side of the vehicle are closer together than the axle ends on the right side, this will cause the vehicle to pull or drift to the left.

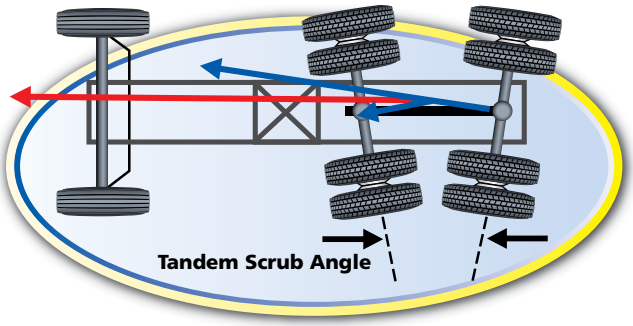

AXLE PARALLELISM AND TRACKING

In the straight-ahead position, the rear wheels of a vehicle should follow the front wheels in a parallel manner. Wheels that are out-of-track can cause excessive tire wear. Failure of the wheel to track is usually due to the following causes:

– Master spring-leaf broken
– Incorrect air spring (bag) height
– Worn springs
– Auxiliary leaves broken
– Loose "U" bolts
– Incorrect or reverse springs
– Bent frame
– Locating rods or torque rods improperly adjusted
– Locating rod or torque rod bushings worn excessively

Failure of the wheels to track is usually quite visible when one follows the vehicle on the highway. It is possible that, due to one of the above causes, no uneven wear manifests itself on the rear tires, but an uneven wear pattern may show itself on the front tires. This is because rear tires may push the vehicle off course and give some toe-out-on-turns in the straight-ahead position to the front tires. Hence, the driver makes a correction to offset the steering action caused by the rear wheels.

If the rear axle of a vehicle is not at right angles to the chassis centerline, the front tires are affected, showing misaligned wear. In the diagram below, the position of the rear axle of the vehicle has been altered because of a weakened left side spring – so that the rear axle on the left side is further from the front axle than the rear axle on the right side.

In this illustration of a 4x2 configuration, the angle of the rear axle causes its wheels to point to the left side so that the rear end of the vehicle is, in fact, self-steered in that direction. The vehicle would then steer itself to the right – unless the driver takes corrective action. If the driver wishes to travel straight ahead, he will naturally compensate by turning his steering wheel. This action introduces a turning moment as if the vehicle were making a turn although it is moving in a straight line due to the toe-like posture of the front wheels. It is more difficult to identify this concept with additional drive axles and the placement of movable 5th wheels. For this reason, the onset of misalignment wear patterns on the front tires may be apparent, even though the lateral forces may be slight and the front wheel alignment settings may be correct.

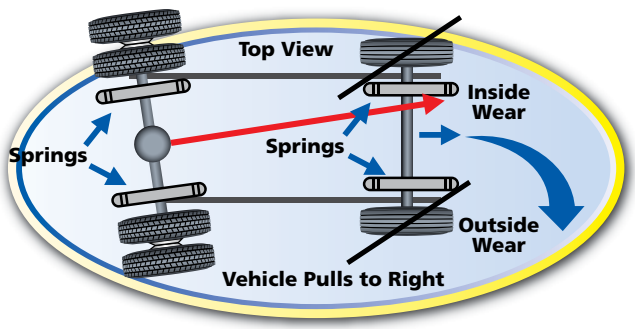

HOW TO CHECK AXLE PARALLELISM AND TRACKING:

With the vehicle on a flat surface and with the suspension in a relaxed position, select two points on the front and rear axles. These two points on each axle must be equal distance from the chassis center (e.g., at the point where the springs meet the axles). Using a plumb line, mark four points on the ground, move the vehicle away, and measure the distance between the marks as shown on the diagram.

A more detailed field type procedure is recommended by Michelin and can be found in the Section Ten, Appendix under Alignment – Field Method (Pages 166-167).

For Truck/Tractor: The Technology and Maintenance Council recommends no more than 1/8 inch between axle ends. If AD = BC and DE = CF, the axles are parallel. If X = X' and Y = Y', the wheels are symmetrical or tracking.

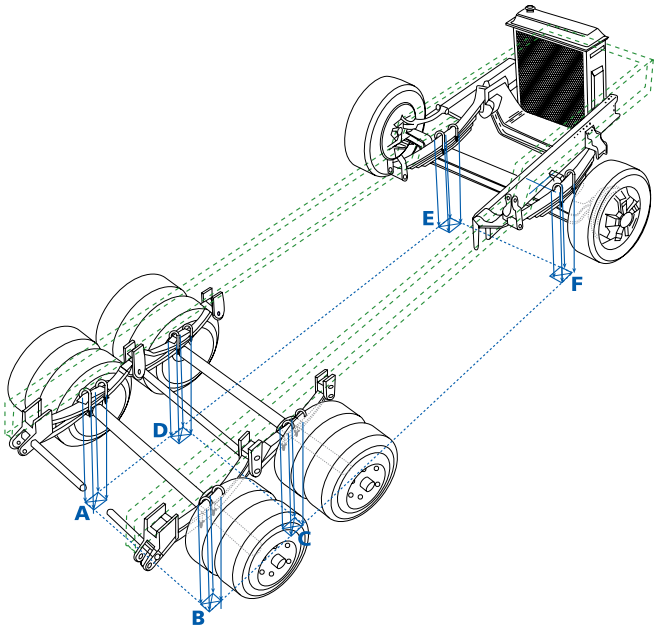

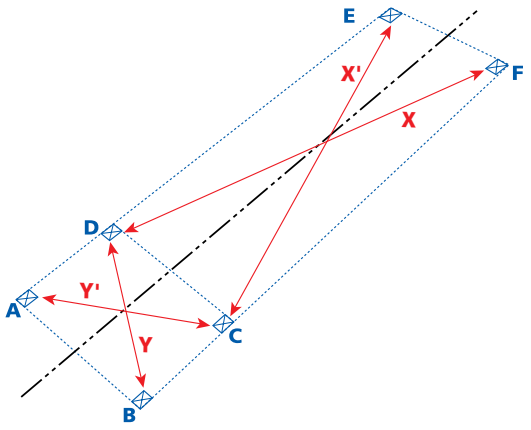

For Trailers: The Truck Trailer Manufacturers Association (TTMA) recommends no more than 1/16 inch between axle ends and 1/8 inch maximum from the trailer kingpin to the lead axle ends. If AD = BC and CE = DE, the axles are parallel and symmetrical. (Reference: *TTMA RP No. 71 Trailer Axle Alignment.*)

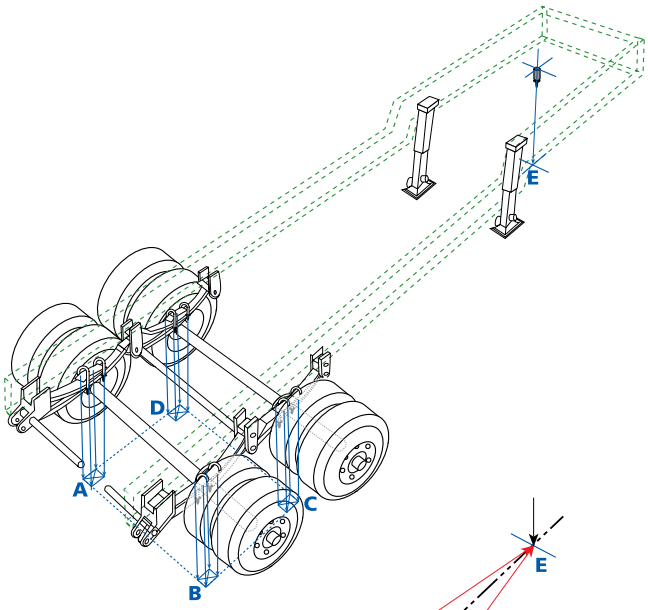

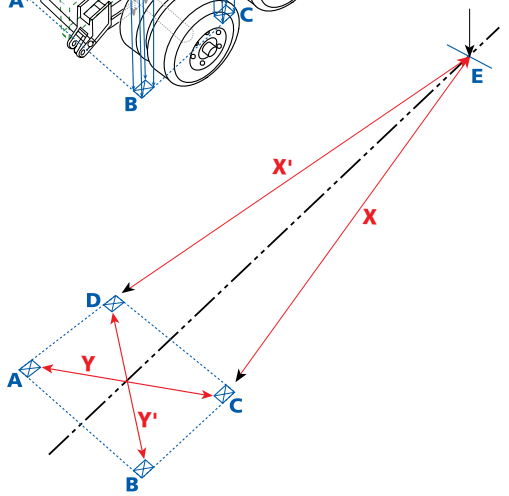

TIRE WEAR PATTERNS DUE TO MISALIGNMENT

It should be noted that some wear patterns might be from multiple causes. Additional information may be obtained in the *TMC RP 216C/219C, Radial Tire Conditions Analysis Guide* and **www.michelintruck.com/reference-materials/videos/#/maintenance-and-training** about the "Fundamentals of Tire Wear" and "Scrap Tire Analysis."

Toe Wear – The typical wear pattern that develops from excessive toe is a feather edged scuff across the crown. Excessive toe is usually seen on both steer tires.

Toe Wear

Toe Wear

Free Rolling Wear – Wear at the edge of a rib circumferentially, which may or may not affect the entire rib widths. Intermittent side forces due to wheel assembly instability cause contact pressure variations, resulting in this type of wear. Generally, due to excessive looseness in the suspension and/or steering components, this is also found in slow wearing positions at high mileage. Insufficient caster and excessive lateral tire/wheel runout also are contributing factors.

Free Rolling Wear

Free Rolling Wear

Camber Wear – If the axle has excessive camber, partial or total wear of the shoulder will occur. For static unloaded vehicles, camber readings for steer positions should fall within the range of 0 to 1/4 degree positive (0.0 to 2.5 mm), and trailer positions should fall within the range of ± 1/4 from 0 degree (± 2.5 mm from 0).

Camber Wear – Steer

Camber Wear – Drive

Camber Wear – Trailer

Cupping Wear – Any loose or worn component in truck steering or suspension systems can cause odd wear, cupping, and flat spots. Check for loose wheel bearings, worn shock absorbers, steering gear lash, worn tie rod ends, and kingpins. Check for possible mismount conditions.

Cupping Wear – Steer

Cupping Wear – Drive

Cupping Wear – Trailer

Flat Spotting Wear – Localized wear across the tread width. Causes include brake lock, brake imbalance, out of round brake drums, axle hop, or skip. A tire being parked on a surface containing hydrocarbon oils, chemicals, and solvents can also cause this type of wear pattern. The affected area of the tread will wear more rapidly, leaving a flat spot.

Flat Spotting – Drive

Flat Spotting – Trailer

Diagonal Wear – Localized wear diagonally across the tread width. Side forces imposed by a combination of toe and camber create diagonal stress in the footprint of the tire. Localized wear patterns tend to follow this same direction creating diagonal wear. For steer positions, causes include excessive toe combined with tandem drive axle misalignment, incorrect steering angle in turns, worn parts, and/or excessive camber setting. For trailer positions, causes include tandem trailer misalignment, negative camber, and loose or worn components.

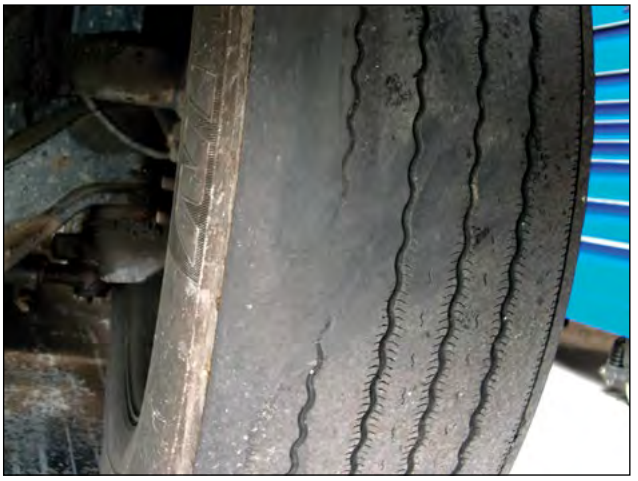

Diagonal Wear

Diagonal Wear

IRREGULAR TIRE WEAR

TRACTOR:

Heel-Toe

Appearance:
Drive-lugs around the tire worn high to low from the front to back edge on tread of tire.

Probable Cause:
High torque, pickup and delivery operations (P&D) plus mountainous terrain, high braking operations.

Analysis/Correction:
Drive tires should be rotated, front to rear; cross rotation is permitted, but will accelerate wear and can reduce removal mileages. With the MICHELIN® X One® tire, since there are no dual pressure differences, heel and toe pattern should clear itself up @ 1/3 worn.

Inset: Notice appearance of shoulder-scrub on side of tread-blocks inner/outer shoulders.

Center Wear

Appearance:
Tire wears more rapidly in the center of the tread, than in the shoulders.

Probable Cause:
LTL (Less than Truckload) operation + high torque, incorrect pressure.

Analysis/Correction:
Five tread depths should be taken in the drive position, allowing one to recognize wear conditions.
Correction of drive-axle pressure will reduce the wear pattern and enhance tire mileage.

River Wear Only

Appearance:
Tire exhibits circumferential wear along the rib-edges next to the major shoulder tread-ribs.

Probable Cause:
Characteristic of slow wear-rate of radial tires.

Analysis/Correction:
None, river wear should not be of concern.

TRAILER:

Step-Shoulder/Localized Wear Shoulder Cupping

Appearance:
Tire exhibits step-down wear on one or both shoulders or localized cupped out areas.

Probable Cause:
Incorrect pressure, damaged/bent trailer-axle, incorrect camber setting, alignment issue, LTL (Less than Truckload) operation, suspension compliance.

Analysis/Correction:
Review tire application with tire manufacturer; review inflation maintenance procedures. Check trailer alignment for bent or worn parts, or consult trailer OE.

Left Front Trailer Position (Original)

Left Front Trailer Position (Rotated)

Trailer Rotation:
Irregular wear on the inside shoulder of trailer tires can be rectified by flipping the tire on the wheel, where the inner shoulder becomes the outside shoulder. Criss-cross rotation may also be helpful depending upon 1st and 2nd trailer axle wear-rates.

Brake Skid

Appearance:
A tire with brake drag is characterized by localized abrasion or flat spot if severe. If left in service, it may continue to grow across the face of the tread.

Probable Cause:
Tractor/trailer moved prior to system pressure building up sufficiently to release parking brakes: resulting in dragging the tires or driver over-using hand or trailer brake.

Analysis/Correction:
Review driver tractor/trailer hook-up and departure instructions. The fleet yard mule driver can be a factor. If they are in a hurry to move trailers, they may pull away before the pressure has built up sufficiently to release the brakes. If the flat spotting is minor, leave the tire in service. If tire induces vibration, has exposed steel or is lower than the minimum required tread depth, remove the tire from service. Even vehicles equipped with anti-lock brake systems (ABS) can experience flat spotting, depending on the number and placement of sensors and modulators used.

BRAKING SYSTEMS AND ISSUES

Air brake issues as they apply to tire wear and damages can result from imbalance or component concerns.

Distorted, brittle, and/or discolored rubber in the bead area are signs of the "outside to inside" breakdown of rubber products as a result of seating on a wheel surface, which is heated to a temperature beyond the limit that the rubber products can tolerate. This damage starts at a temperature in the mid-200 degree Fahrenheit range, with accelerated damage occurring above the 300 degree Fahrenheit range.

1. Brake imbalance can be the result of the air system, including valves, not actuating the brakes simultaneously. This may be the result of dirt, leaks, and/or valve cracking pressure. In a tractor/trailer combination, the more rapid brake application time now being used (up to twice as fast as pre FMVSS*-121 systems) can result in a brake imbalance due to combinations of old tractors with new trailers or new tractors with old trailers.

2. Component situations, such as out-of-round brake drums or unevenly worn brake shoes, also result in tires acquiring odd wear and flat spots.

3. Another source of brake imbalance is the improperly adjusted slack adjuster. Any of these brake imbalance situations can result in one or more wheel positions locking up and flat spotting the tires.

4. Brake drums with balance weights thrown may result in ride disturbance.

5. Brake lock (flat spots) conditions may be evidence of deficiency in the Anti-Lock Brake System.

*FMVSS - Federal Motor Vehicle Safety Standards

SUMMARY OF TIRE ISSUES DUE TO BRAKES

Problem	Possible Causes	Result
Brake Heat	1. Overuse on down grades due to improper gear. 2. Brake dragging due to mis-adjustment of wheel bearings. 3. Repeated stops without cooling time. 4. Improper adjustment or braking balance leads to excessive amount of braking in one or more wheel positions.	Bead damage to the tire ranging from simple distortion to complete unwrapping of the casing from the bead wire.
Lock Up	1. Out-of-round brake assembly. 2. Slow release valves. 3. Mis-adjustment, slack adjusters. 4. Brake drum runout.	Flat spots and odd wear.

Brake Heat

Brake Heat

Brake Lock

Brake Lock

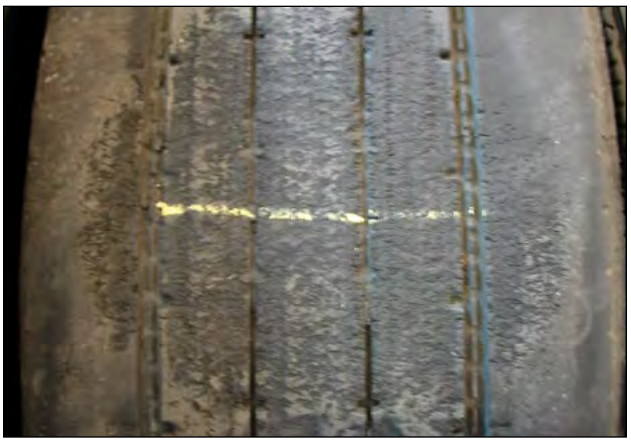

Brake Lock on Ice

Brake Lock on Grooved Payment

BRAKE HEAT OVERVIEW

Brake temperatures on trucks often reach very high temperatures. Brake drums can reach temperatures of 600°F or more and are in very close proximity to the wheels. This heat can be easily transferred to the wheels and tires. Brake drum heat is transferred to the wheel primarily through radiation and convection. The hot brake drum radiates heat in all directions to the wheel. In addition, the drum heats the air between the drum and the wheel. The heated air rises and transfers additional heat energy to the wheel through convection. Much of the heat is transferred to the wheel in the bead mounting area due to its close proximity to the brake drum. The wheel then directly conducts heat to the tire bead resulting in elevated temperatures in the tire bead area.

Excessive bead heat can affect tire life in many truck tire applications. Vehicles in urban and refuse service are most commonly associated with bead heat issues, but any application that experiences hard braking can be affected.

Duals – Close to Brake Drum

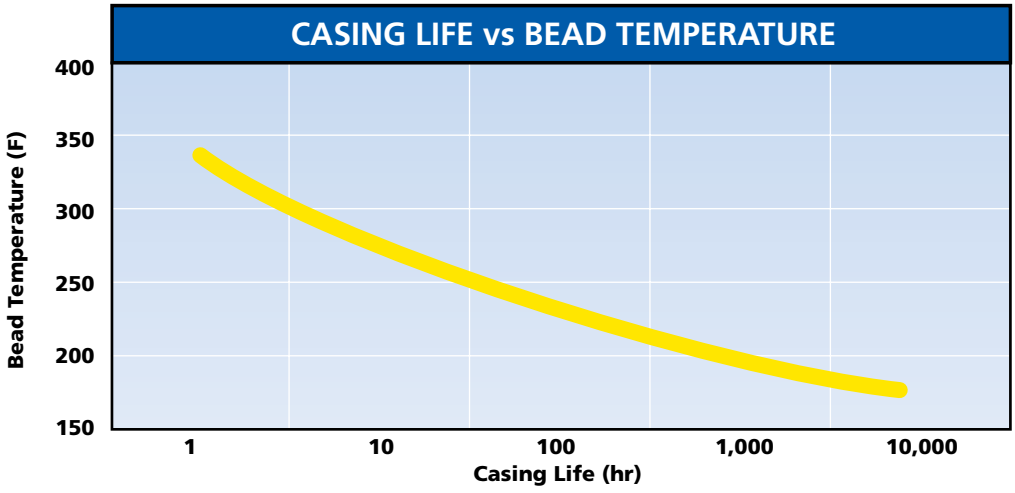

Results of bead heat:

1. **Immediate failure:** In some cases, after periods of hard braking where brake drums reach very high temperature (in excess of 600°F), immediate failure can occur. This normally occurs when a truck is brought to a stop for a period of time with very high brake temperatures. Often this occurs when an over the road truck stops at a truck ramp at the bottom of a long descent. As the heat rises from the brake drum, there is excessive heat buildup in the portion of the tire bead directly above the brake drum (inner bead of inside dual). The high temperature can cause a breakdown of the rubber products in the bead area and allow the steel body cables to unwrap from the bead. This could result in a rapid tire pressure loss occurrence. This phenomenon is also common in urban and refuse fleets when the driver stops for a break after a period of hard braking.
2. **Degradation of the casing: Heat is a tire's worst enemy!** A tire subjected to high heat conditions over an extended period of time will experience accelerated degradation of the rubber products. The degradation may result in a blowout during operation, or it may render the casing unsuitable for retread. The graph on the previous page demonstrates how operating with bead temperatures in excess of 200°F will significantly reduce your casing life.

Bead damage as a result of brake heat is recognizable in 3 stages of severity. In the first stage, the bead starts to turn inward. This can be visibly identified on the tire when it is dismounted. A straight edge placed across the beads from one bead to the other no longer rests on the bead point, but now rests closer to the bead bearing area.

1st Stage – Turning of the Bead

The second stage occurs when the rubber in the bead area starts to split or crack, indicating that the steel casing plies are starting to unwrap.

2nd Stage – Bead Splitting From Heat

The third stage is when the casing ply fully unwraps from the bead. In extreme cases the casing ply unwraps from the bead all the way around the tire. At this point the tire completely separates from the bead wire. The bead wire can entangle itself around the axle if this type of separation occurs.

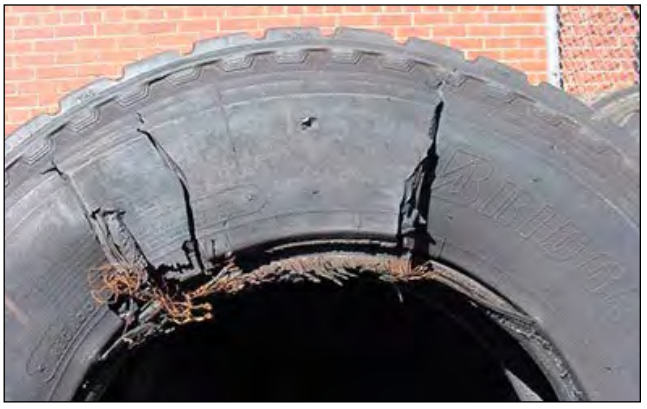

3rd Stage – Partial Unwrapping of the Casing Ply

3rd Stage – Complete Unwrapping of the Casing Ply

5TH WHEEL MAINTENANCE AND PLACEMENT

Placement of the 5th wheel can be determined by the need to properly distribute the load over the drive tandems and the steer axle for legal loads. It can also be placed to lengthen or shorten the overall length of the tractor-trailer unit. However, with sliding 5th wheels, many drivers place the 5th wheel to give the smoothest ride and easiest steering. The placement and movement of the 5th wheel can change the tire loading substantially, causing tire overload or tire underload conditions. Insufficient lubrication of the 5th wheel is a major cause of poor vehicle handling. Distortion of the 5th wheel plate will cause a similar condition to lack of lubrication and dog tracking of the trailer.

Insufficient Lubrication

Proper Amount of Lubrication

A 5th wheel in the most rearward position, combined with stiff front axle springs, can cause the front tire to periodically unload, leading to vehicle shimmy and irregular tire wear. Vehicle manufacturers usually recommend a 5th wheel placement that results in payload transfer to the front axle. Improper front axle load distribution can adversely affect braking and handling, which can result in excessive tire wear.

Distortion of the 5th Wheel

WHEEL BEARING AND HUB INSPECTION

Driver pre-trip: Visually inspect each wheel end for loose, damaged or missing fasteners or hubcaps. Look for oil and lubricant leaks and oil level and condition.

Inspect in conjunction with preventative maintenance schedule: With axle raised and supported, remove tire and wheel assembly, check for above items. Use a magnet through the hubcab fill plug to detect any metallic materials in the lubricant.

12 month or 100,000 mile inspection: In addition to above items, check wheel end play (should be between 0.001 and 0.005 inch). If at 0.000 or greater than 0.005 inch, adjustment is necessary. Service accordingly following manufacturer recommended procedures.

5 year or 500,000 mile service (frequency dependent on service application): Follow manufactures recommended procedures for removal/reassembly of hub assembly and service of manually adjusted or pre-adjusted bearings and Anti-Lock Braking System.

SUSPENSIONS

Forming the link between the truck and the tire, the suspension system provides a very important contribution to tire performance. The suspension must support the load and maintain the tire in the proper operating position on the road. If the suspension is in good operating order, the tires will track straight and be evenly loaded. This promotes slow, even wear and low tire cost-per-mile.

Different truck manufacturers use different suspension systems. Some of these are adjustable for making minor changes, and some are not adjustable. All suspensions have parts that move and are, therefore, subject to wear. Worn or broken suspension parts are one of the main causes of irregular tire wear and handling concerns. (Ref. – Quick checks for system and suspension faults on Pages 79-80.) When observing irregular wear on a tire, first check for worn or broken front and rear suspension parts.

AIR SUSPENSION SYSTEMS

As vehicle manufacturers move away from multiple springs, there is an increased need to dampen the effect of road shock. Air suspension systems consist of fasteners and bushings with various components such as air springs, air or gas shocks, torque arms, air lines and valves held together by nuts and bolts. Day to day operations generate a constant twisting movement to all these parts and greater awareness and maintenance diligence should be paid to wear and proper torque to ensure proper performance of the system and the effect this has on tire life. All torque values should be verified to manufacturer's specification, and new shock absorbers should be considered when installing new tires so as to maximize tire life. Shock absorbers used on air ride suspensions should typically

provide effective dampening control for 150,000 miles of on-highway operations (100,000 miles for vocational applications). Refer to *TMC RP 643, Air-Ride Suspension Maintenance Guidelines* on air suspension systems.

Routine inspection of trailer air suspensions should be scheduled to inspect connectors and bushings per manufacturer instructions. Pivot Bushing inspection should consist of taking measurements before disassembly to complete your inspection, complying with warranty* procedures, and replace the bushing if cracks or complete separation of the rubber is present.

* See warranty for details.

QUICK CHECKS FOR REAR SUSPENSION FAULTS

ISSUE	POSSIBLE CAUSE
Shock Absorbers	• Improperly installed mounts and/or bushings • Damaged or leaking shocks
U-Bolts	• Not torqued to specification • Improperly torqued due to mismatched metric and standard bolts with different specifications
Suspension System	• Loose attaching bolts • Worn bushings in shocks, spring hangers, torque rods • Missing alignment adjusting shims • Excessive drive axle offset • Excessive sway bar movement • Worn hanger pins allowing axle movement • Improperly functioning ride height control system
Wheels out of Track (Dog Tracking)	• Master or auxiliary spring-leaf broken • Incorrectly installed springs • Worn springs • Loose U-bolts • Bent frame • Torque rods improperly adjusted • Torque rod bushings worn excessively
Alignment	• Incorrect parallelism, skew, scrub • Dual position toe-in or out (induced toe value at each drive wheel) • Camber
Miscellaneous	• Wheel bearings loose or damaged • 5th wheel placement • 5th wheel and chassis lubrication

QUICK CHECKS FOR TRAILER SYSTEM FAULTS

QUICK CHECKS WOULD INCLUDE:	
• Verify OEM alignment after 1,000-3,000 in-service miles	• Alignment (induced toe value at each dual position, negative camber, parallelism)
• Verify rails are straight	• Worn or loose wheel bearings
• Loose or missing fasteners, look for elongated holes	• Brake imbalance
• Damaged or bent brackets	• Slow release of trailer brake systems
• Look for wear at u-bolts and springs – signs of movement	• Operational conditions, high scrub application
• Look for signs of rust at track rod to indicate movement	• Tire scrub/dragging at dock deliveries (commonly called Dock Walk)
• Inspect torque arm clamp nuts and bolts for proper torque (check threads to see if stripped)	• Pressure maintenance (improper for operation)
• Verify spring beams are centered on hanger; if not, check alignment	• Overloaded/underinflated, high speed empty hauls
• Slider assembly movement, loose attaching bolts, u-bolt torque	• Mismatched pressure by dual position or axle
• Air-ride suspension movement	• Mismatched tread depth/tire design by dual position
• Insufficient lubrication	• Improper tread depth for application/operation
• Worn shocks or springs	• New steer tire(s) mixed in trailer positions
• Bushings cracked or separated (inspect per manufacturer procedures)	• Tire rotated from steer or drive with existing wear
	• Improper tire assembly mounting
	• Driving habits, improper use of trailer brakes

QUICK CHECKS FOR FRONT SUSPENSION FAULTS

ISSUE	POSSIBLE CAUSE
Thumps and Knocks from Front Suspension	• Loose or worn ball joints • Loose front suspension attaching bolts • Missing adjusting shims • Loose shock absorber mountings • Check for worn or damaged spring eye bushings
Groans or Creaks from Front Suspension	• Loose attaching bolts • Bent control arm or steering knuckle • Worn kingpins or kingpin bushings
Squeaks from Front Suspension	• Coil spring rubbing on seat
Wander or Shimmy	• Worn tie rod ends • Worn kingpins or kingpin bushings • Loose suspension attaching bolts • Weak shock absorbers • Weak front springs • Incorrect front end alignment • Steering shaft U joint
Frequent Bottoming of Suspension on Bumps	• Weak front springs • Weak shock absorbers
Front End Sag	• Weak front springs
Irregular or Excessive Tire Wear	• Incorrect front wheel alignment • Worn kingpins or kingpin bushings • Loose front suspension attaching bolts • Weak shock absorbers • Weak front springs • Bent control arm or steering knuckle • Worn tie rod ends • Excessive steering system compliance • Steering shaft U joint • Loose wheel bearing
Floating, Wallowing, and Poor Recovery from Bumps	• Weak shock absorbers • Weak front springs
Pulling to One Side While Braking	• Worn kingpins or kingpin bushings • Loose suspension attaching bolts • Bent control arm or steering knuckle • Weak front springs • Weak shock absorbers • Loose wheel bearing • Brake adjustment
Rough Ride and Excessive Road Shock	• Damaged shock absorbers • Weak shock absorbers • Weak springs • Control arm shaft bushings need lubrication • Worn kingpins or kingpin bushings
Excessive Steering Play	• Worn kingpins or kingpin bushings • Loose suspension attaching bolts • Worn control arm shaft bushings • Weak front springs • Worn tie rod ends • Steering shaft U joint • Loose wheel bearing
Pulls To One Side	• Worn kingpins or kingpin bushings • Loose suspension attaching bolts • Worn control arm shaft bushings • Weak front springs • Incorrect wheel or axle alignment • Bent control arm or steering knuckle
Hard Steering	• Worn kingpins or kingpin bushings • Incorrect front end alignment • Bent control arm or steering knuckle

SECTION FIVE

MICHELIN® X One® Tires

Section Five

MICHELIN® X One® Tires 81-112

DRIVER INFORMATION 82

AXLES AND WHEEL ENDS 83

- Axle Identification Tags
- Load Ratings

SPINDLES 86

OVERALL VEHICLE TRACK AND WIDTH 87

- Use of Outset Wheels with MICHELIN® X One® Tires
- Axles Track Widths
- Vehicle Track

BEARINGS 89

ENGINE COMPUTERS / FUEL ECONOMY 90

AIR INFLATION AND PRESSURE MONITORING SYSTEMS 90

- The Use of Pressure Monitoring and Inflation Systems with MICHELIN® Truck Tires
- Automated Tire Inflation Systems (ATIS) on Trailers and Missed Nail Holes

TRUCK TYPE BY WEIGHT CLASS 92

- Recommendation for use of MICHELIN® X One® Tires in 4x2 Applications

TIRE PRESSURE MAINTENANCE PRACTICES 94

- Comparative MICHELIN® X One® Tire Sizes Wheel
- MICHELIN® X One® Tire Mounting Instructions

HEAT STUDY 96

- Brake Heat Overview
- Brake Heat Evaluation: MICHELIN® X One® Tires vs Duals

TIME LABOR STUDY – MICHELIN® X ONE® TIRES VS DUAL ASSEMBLY 100-101

- Torque

RETREAD AND REPAIR RECOMMENDATIONS 102-106

- Repair Recommendations
- Retread Recommendations
- Chains
- Gear Ratio
- Footprint Comparisons to Dual Tire Fitments

OPERATION AND HANDLING 107-112

- Over-Steer
- Under-Steer
- Cornering Stiffness for Different Tires
- Hydroplaning
- Rollover Threshold
- Jack-Knife
- Rapid Tire Pressure Loss Procedure
- Traction
- Chains
- Stopping Distances
- Limping Home
- State and Local Regulations

DRIVER INFORMATION

Pressure Maintenance

Drivers have commented that an under-inflated MICHELIN® X One® tire is more likely to be detected with a simple visual inspection than dual tires. However, pressure is difficult to gauge visually even for the most experienced driver.

- ▲ **Do** use a properly calibrated gauge when verifying the pressure of a MICHELIN® X One® tire.
- ▲ **Don't** rely on the appearance of the tire.
- ▲ **Do** remove and inspect any tire found to be 20% below the recommended pressure.

Failure to do so may cause tire failure.

Vehicle Handling

Drivers have commented that the wide, stable footprint of the MICHELIN® X One® tire can provide the feel of a much more stable truck compared to traditional dual tires. However, while most MICHELIN® X One® tire fitments allow the track of the tractor and trailer to be widened, the vehicle's behavior in curves (on ramps or off ramps) is still subject to roll-over at excessive speeds.

- ▲ **Don't** let the outstanding handling of MICHELIN® X One® tires give you a false sense of stability in curves.
- ▲ **Do** respect all posted speed limits regardless of tire fitment.

Failure to do so may cause vehicle to tip.

Rapid Tire Pressure Loss Techniques

Extensive testing has shown that a rapid tire pressure loss on a MICHELIN® X One® tire will not compromise the stability and behavior of the vehicle. However, with one tire on each axle end, the loss of pressure will allow the wheel and axle end to drop and possibly contact the road surface.

- ▲ **Don't** try to "limp home" or continue to run on a flat tire. Limping is a direct CSA (Comprehensive Safety Analysis) violation.
- ▲ **Do** down shift or use the trailer brake (when appropriate) to avoid tire/wheel assembly lock-up.
- ▲ **Do** release the brakes intermittently as you slow down to allow some rotation of the assembly.

Failure to do so may cause irreparable damage to the tire, wheel, axle components, and vehicle.

AXLES AND WHEEL ENDS

AXLE IDENTIFICATION TAGS

There are primarily three manufacturers of drive and trailer axles for the long haul highway market. Meritor®, DANA, and Hendrickson all supply trailer axles, while only DANA and Meritor® supply drive axles.

Meritor® — DRIVE AXLE IDENTIFICATION

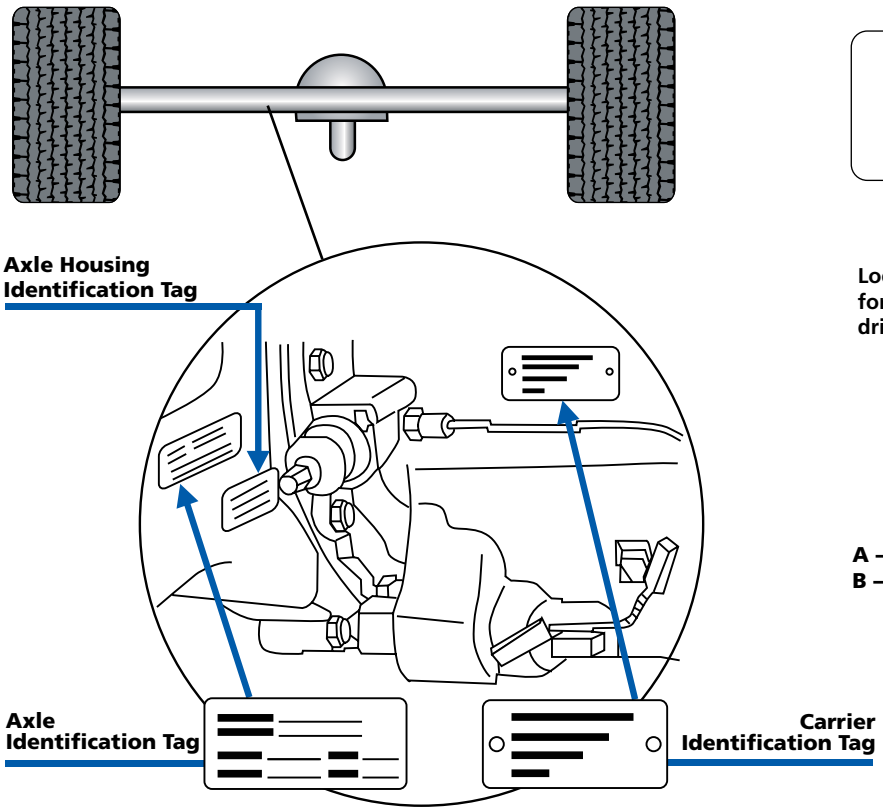

AXLE IDENTIFICATION TAG INFORMATION

Model No. _____
Customer No. _____
Serial No. _____ **Plant**_____
Ratio _____

Identification Tag
Location of the identification tag, or stamp number, for the axles. Location is determined from the left driver side looking toward the front of the vehicle.

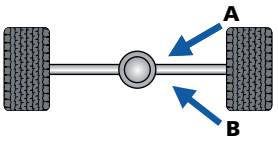

A — Front engine drive — Right rear, next to cover
B — Rear engine drive — Left or right rear, next to drive unit

Meritor® — TRAILER AXLE IDENTIFICATION

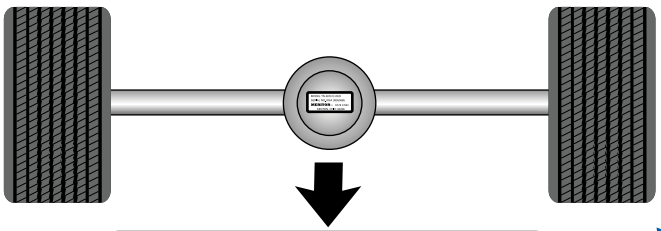

MODEL TN 4670 Q 2020
SERIAL NO. KNA 38050685
MERITOR® DATE 27693
KENTON, OHIO 43326

T N 4 6 7 0 Q 2 0 2 0

Beam Type
T = Tubular

Beam Capacity

lbs	kg
N = 22,500	10,206
P = 22,500/25,000/30,000	10,206/11,340/13,608
Q = 25,000/30,000	11,340/13,608
R = 22,500/25,000	10,206/11,340

Modification
1 = Single Wheel
2 = Intermodal
3 = Bolted on Brakes
4 = Manual Bearing Adjustment
6 = Positive Bearing Adjustment
8 = 0.625" Nominal Wall Axle

Brake Width
1 = 10" (25 cm)
6 = 6" (15 cm)
7 = 7" or 7.5" (18-19 cm)
9 = 8" (20 cm)
0 = No Brakes

NOTE: The graphic provided is for reference only. Axle specific questions should be directed to the axle manufacturer.

DANA — DRIVE AXLE IDENTIFICATION

Parts Identification
Axle Housing
1 - Axle Housing

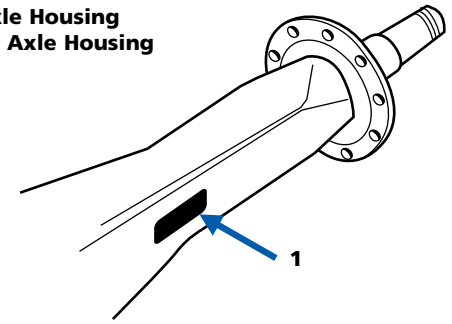

Axle Shaft
2 - Axle Shaft Part Number

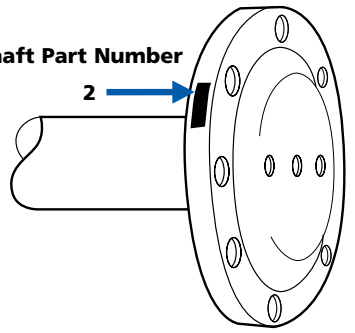

S 26 - 1 7 0 D

D - Dual Drive Forward Axle with Inter-axle Differential
G - Single Rear Axle (Global)
R - Dual Drive Rear Axle
S - Single Rear Axle (N.A.)
T - Tridem Configuration

GAW Rating
X 1000 lbs. (N.A.)
x 1 TN (Global)

Gear Type
1 - Standard Single Reduction
2 - Dual Range
5 - Helical Reduction
6 - Helical Overdrive

Design Level

Head Assembly Series

Options
B - Bus/On-Center Bowl
C - Controlled Traction
D - Differential Lock
E - High Entry Single
F - Flipped/Rolled Over
H - Heavy Wall
I - Integral Brake
L - Limited Slip
N - No Spin Differential
O - Offset Change
P - Lube Pump
R - Retarder Ready
U - Unitized Spindle
W - Wide Track Housing

DANA — AXLE IDENTIFICATION

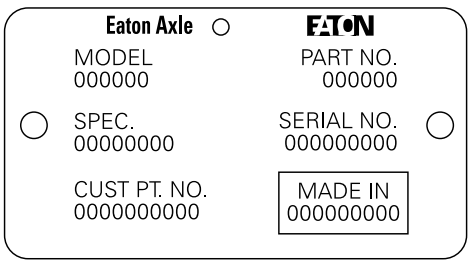

Identification Tag

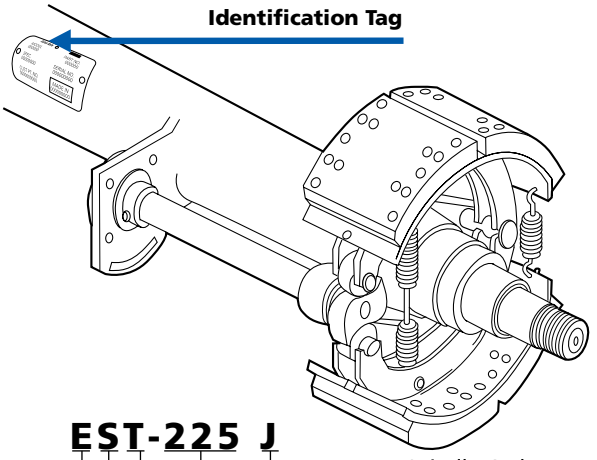

0 00 000 0000

Serial Number
Julian Date
Year
Manufacturer's Location

EST-225 J

Spindle Code
J - "J" Trailer Spindle
D - "D" Trailer Spindle
P - "P" Trailer Spindle
Tube Capacity Rating (x 100 lbs.)
Brake Code
T - 16 1/2" x 7" Brake
R - 15" x 8 5/8" Brake
Extended Service Brake
Eaton

NOTE: The graphic provided is for reference only. Axle specific questions should be directed to the axle manufacturer.

HENDRICKSON — TRAILER AXLE IDENTIFICATION

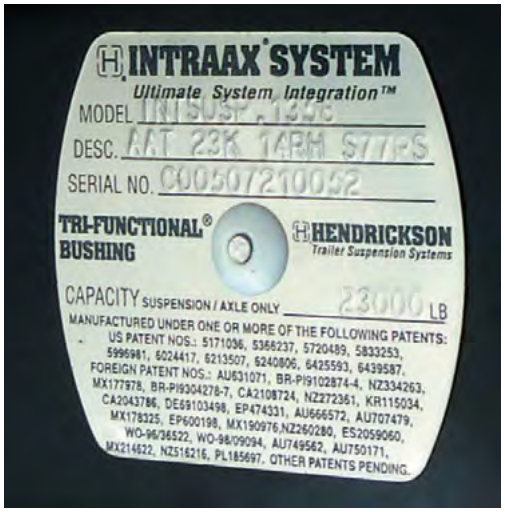

Model: VANTRAAX®.5836
Description: HKANT40K 165RH 77USHD MA X7SH
U - HUS Spindle

Model: VANTRAAX®.2157
Description: HKAT 50K 16RH 71NST QD X7SHD
N - N Spindle

Model: INTRAAX®.2597
Description: AAT 23K 14RH C77USST 7S
U - HUS Spindle

Model: INTRAAX®.3598
Description: AAL 30K 9RH 71PST
P - P Spindle

NOTE: The graphic provided is for reference only. Axle specific questions should be directed to the axle manufacturer.

LOAD RATINGS

The load/capacity rating of a given axle is determined by the axle housing strength, bearing capacity, and hub capacity. For some ultra-lightweight axles, the reduced axle housing thickness may be the weak link, but usually it is the bearings or hub that will be the limiting factor.

These axles and components are typically designed under the assumption that the action line of the tire load is located between the two bearings. This is typically found with dual tire mounting or with single tires with very low outset wheels with the axle rating being similarly determined.

If wheels with greater outset are used, the resulting cantilever loading may require lower ratings for some of the axle components. The level of de-rating and the implications thereof are determined by the axle manufacturer, so they should be consulted prior to fitment of outset single wheels.

Prior to contacting the axle manufacturer, you should consult the axle identification tag to obtain the following information:

– Axle Manufacturer
– Manufacturer's Model #
– Axle Serial Number
– Axle Capacity

Information on actual operational axle loading (as opposed to rated load) is crucial, since the axle manufacturer may recommend de-rating the axle below the vehicle manufacturer's GAWR (Gross Axle Weight Rating).

With this data in hand, contact the particular axle manufacturer at the numbers listed below for specific application information.

ArvinMeritor™ – www.meritor.com
DANA – www.dana.com
Hendrickson – www.hendrickson-intl.com

SPINDLES

There are three main spindle types you will encounter when retrofitting MICHELIN® X One® tires: “N”, “P”, and “R”.

N-TYPE SPINDLES (TAPERED)

N-type spindles are tapered to the outboard end and utilize a smaller outboard bearing and a larger inboard bearing.

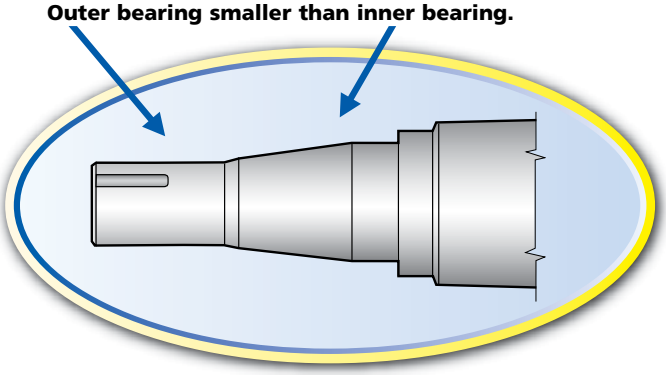

P-TYPE SPINDLES (STRAIGHT)

P-type is a parallel spindle design (straight shaft) and utilizes the same sized bearings inboard and outboard. This is generally a heavier duty axle end.

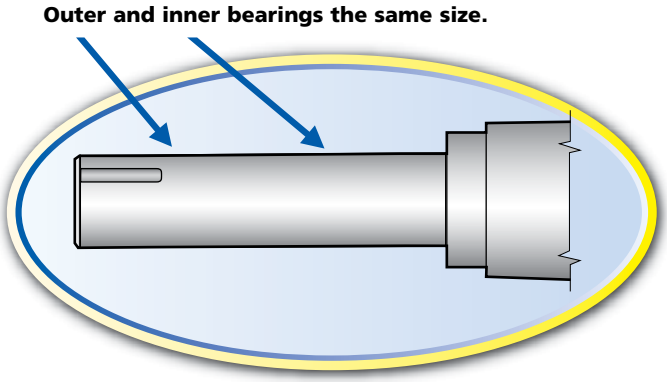

R-TYPE SPINDLES

R-type is a drive axle spindle configuration. The R-type spindle for drive axles is typically straight with bearings of nearly the same size.

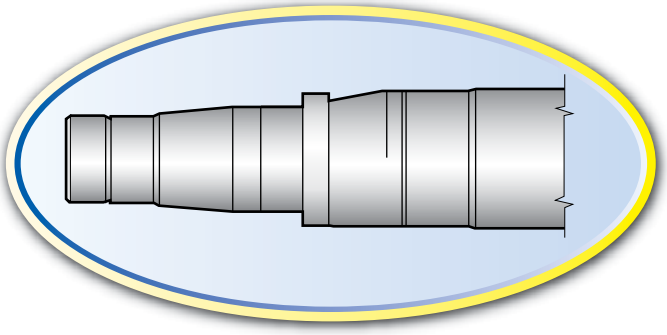

The best way to determine what type of spindle may be fitted to a given axle is to reference the axle ID data plate affixed to the axle or the suspension ID tag as described on Pages 83-85. The following photos display actual tag placements.

Tag Placement

Tag Placement

A quick rule of thumb is to measure the hub cap. N-type is usually ~4.5” and the P-type is usually ~6.0”.

N-Type Spindle

P-Type Spindle

OVERALL VEHICLE TRACK AND WIDTH

Vehicle track width is determined by taking the axle track width and adding or subtracting the left and right wheel outsets or insets respectively.

An easy way to measure this yourself is to start on the left side of the axle, hooking your tape on the outside edge of the tread. Stretch the tape to the right side of the axle and measure to the inside edge of the tread.

Take the measurement where the tape measure crosses the left edge of the right side tire's tread.

The measurement you have just taken is your vehicle's track width. Simply put, it is the center to center distance of your tires.

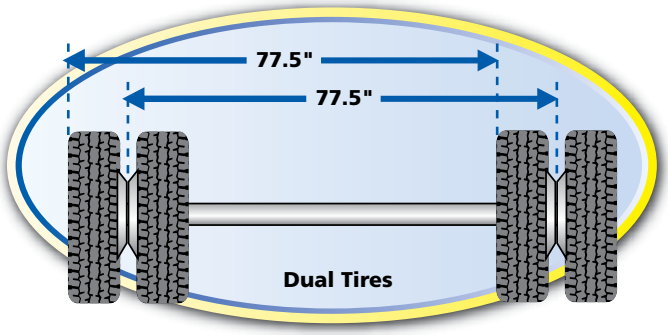

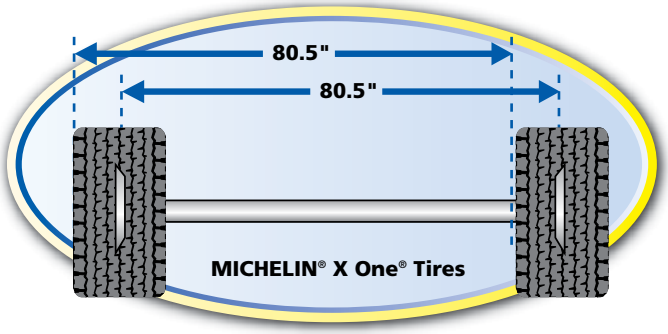

This method also works well for determining the track width on dual tires.

Without changing the width of your axle, your track width can change depending on your wheel outset or inset.

Outset: The lateral distance from the wheel centerline to the mounting surface of the disc.

Outset places the wheel centerline outboard of the mounting (hub face) surface.

Inset places the wheel centerline inboard of the mounting (hub face) surface or over the axle.

⚠WARNING

If 2" outset wheels are mounted backwards, this will significantly reduce track width and could affect vehicle stability possibly leading to an accident, injury or death.

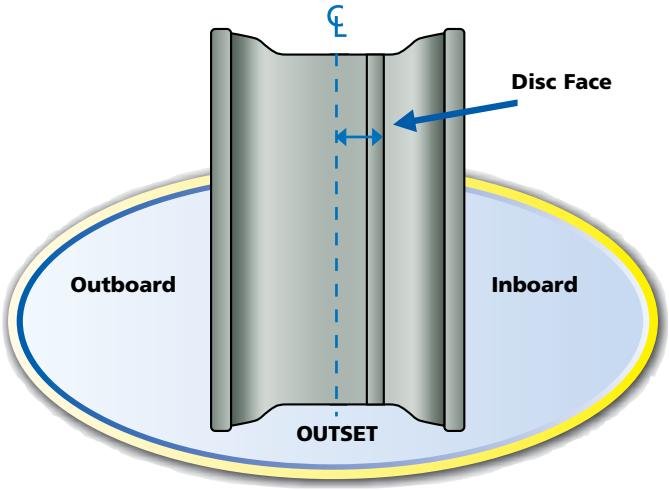

Overall width of axle assembly is determined by measuring the outer tire sidewall to outer tire sidewall. This measurement is taken at the top of the tire's sidewall to avoid measuring the sidewall deflection. The Federal DOT (Department of Transportation) maximum allowed is 102".

For a close approximation, clip the end of the tape measure on the left tire's outside sidewall and pull the tape to the outer sidewall of the outer tire on the opposite side. If your measurement is close to 102", then a more precise method will be required.

USE OF OUTSET WHEELS WITH MICHELIN® X ONE® TIRES

The MICHELIN® X One® tires (445/50R22.5 and 455/55R22.5) require the use of 14.00 x 22.5” wheels. The majority view of the wheels currently offered today have a 2” outset.

Some axle and hub manufacturers have clarified and confirmed their position concerning the use of such wheels with their respective components. While the position of the component manufacturers is not totally consistent, the majority view of the wheel currently offered have a 2” outset.

Truck and trailer manufacturers may have different specifications. For optimum track width, stability, and payload, end-users should talk to their trailer suppliers about the use of 83.5” axles with zero outset wheels.

A trailer specified with 83.5” inch axles is intended for single tire use. Switching to dual tire configuration could exceed the legal maximum overall width of 102”.

End-users that have retrofitted vehicles with 2” outset wheels should contact their respective vehicle, axle, or component manufacturers for specific application approvals or maintenance recommendations.

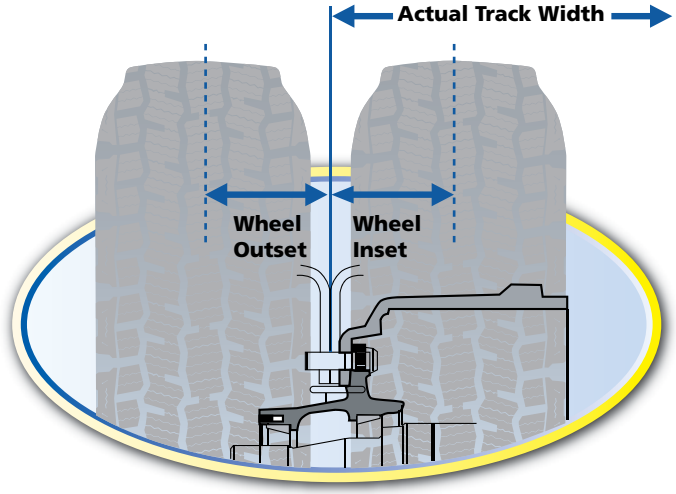

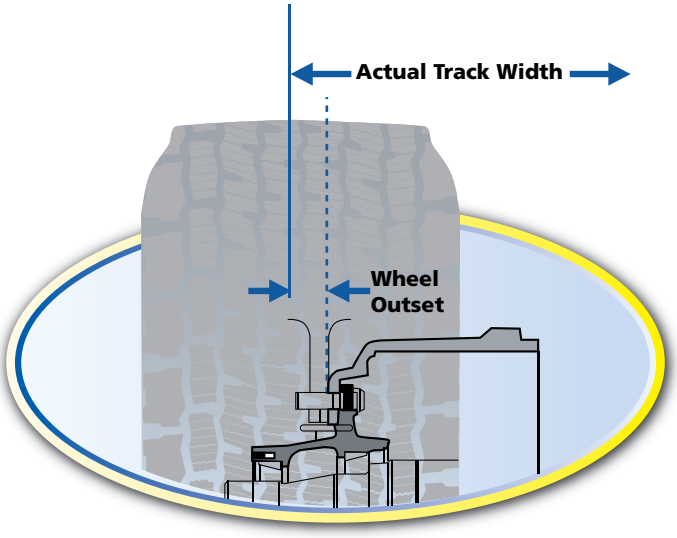

AXLES TRACK WIDTHS

Three standard trailer axle track widths are available. They are 71.5”, 77.5”, and 83.5”. A typical tandem drive axle track width is approximately 72”. Check with the axle manufacturers for other sized options.

Axle width is measured from spindle end to spindle end (the two widest points).
Axle track is a center to center distance between the dual or center of single tire to center of single tire.

71.5” is a standard axle track width found on bulk and liquid tankers.
77.5” is a standard axle track width for 102” wide trailers.
83.5” is the newer wider track axle intended for use with wide singles and 0” outset wheels for increased track width, stability, and payload.

VEHICLE TRACK

With a standard length axle and 2” outset wheels, the resulting variation in track width is an increase of approximately 1.5” per side (3” total) as compared to a dual tire configuration.

End-users that have retrofitted vehicles with 2” outset wheels should contact their respective vehicle, axle, or component manufacturers for specific application approvals or maintenance recommendations.

Measurements are rounded.

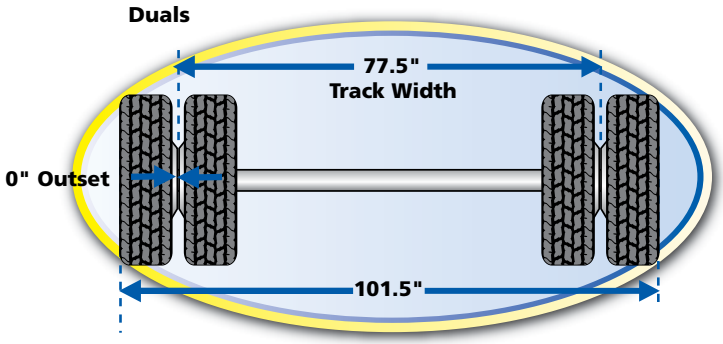

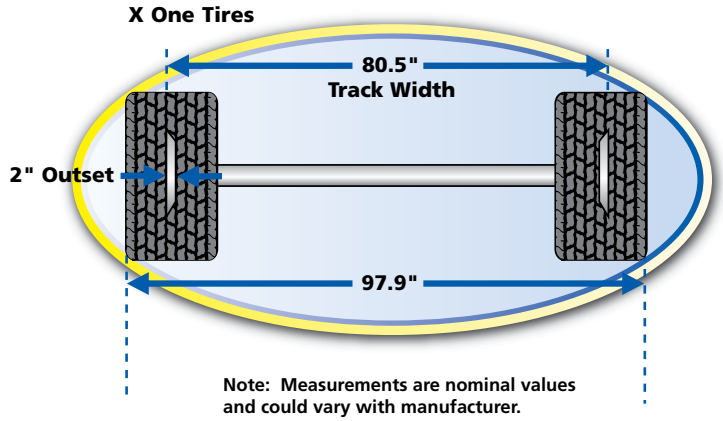

Note: Measurements are nominal values and could vary with manufacturer.

BEARINGS

Wheel-end bearings for trucks and trailers are typically the tapered roller type with either grease, semi-fluid grease, or oil level lubrication. Anticipated bearing life is compared by running an ANSI (American National Standards Institute) L10a test to statistically determine the fatigue life. The test variables are wheel end loading (amount and location), bearing end-play, tire and wheel weight, tire static loaded radius, and duty cycle (vehicle speed and turn frequency and lateral g loading). The output is L10a Weighted Bearing System Life in miles.

The common belief among fleet maintenance technicians is that bearings do not fail or wear out in normal service unless subjected to loss of lubricant, excessive endplay, or excessive preload.

However, due to increased variances in the quality of bearings in the market place, proper inspection/ maintenance practices should be employed to ensure preventing premature failures and extending the life of the bearing.

Poor Quality Bearings

- New bearings show pitting on the rollers
- Bearing failure mode is spalling across the entire roller
- Bearing cage failures also occurs

"New" Bearings

Old Bearings

Good Quality Bearings

- New bearings show a perfect clean finish
- Bearings fail in an expected failure mode; light spalling on the loaded edge

New Bearings

Old Bearings

TMC recommends all axle ends be checked annually or at 100,000 miles. For more information, refer to *TMC RP 631A, Recommendations for Wheel End Lubrication.*

Using standard bearings with a 2" wheel outset on a N-type spindle arrangement does reduce the L10a bearing life expectancy. Bearing manufacturers offer enhanced bearings for trailer and drive axle applications that provide L10a life with 2" outset single wheels near that of conventional bearings with dual wheels.

These bearings have an extra roller with a slightly different contact geometry between the cup and cone and are machined to tighter tolerances and a smoother surface finish.

Timken's 454-Series™ wheel bearings*:

- One bearing for Dual and Wide Singles
  - Specially designed to handle the 2" outset loads
  - Allows consistency within fleet
  - Provides flexibility of wheel arrangements
- Compatible with industry standard components
  - Use with popular axle and hub designs
  - Can retrofit onto existing equipment

*For more information on the Timken® 454-Series™ wheel bearings, visit The Timken Company at www.timken.com.

IMPORTANT: Some wheel bearing assemblies have warranties that may be voided when the wheel ends are disassembled. Contact your axle and/or suspension component supplier before removing any wheel end components.

	Cone	Cup	MileMate® Set*
N Trailer Outer	NP454049	NP454011	Set 440
N Trailer Inner	NP454248	NP454210	Set 441
R Drive Outer	NP454580	NP454572	Set 442
R Drive Inner	NP454594	NP454592	Set 443
P Trailer Inner & Outer	NP454445	NP454410	Set 444

*454-Series™ is a trademark of The Timken Company. Timken® and MileMate® are the registered trademarks of The Timken Company.
See www.timken.com/454wheelbearing for Limited Warranty information.

ENGINE COMPUTERS / FUEL ECONOMY

Tire revolutions and axle ratio are inputs to the Engine Control Module (ECM) to manage road speed. Changing from dual to MICHELIN® X One® tires may require changing the Tire Revolutions per Mile (Tire Revs./Mile) value in the ECM in order to ensure speed, distance, and fuel economy are accurate per indications. Reference the MICHELIN® Truck Tire Data Book (MWL40731) for proper Tire Revs./Mile values for the MICHELIN® X One® tires you chose.

To accurately determine fuel efficiency gains from switching to MICHELIN® X One® tires, it is recommended that SAE (Society of Automotive Engineers) J1321 (revision) - Type II Fuel Test be conducted to verify the values determined by the engine computer.

New EGR (Exhaust Gas Recirculation) engines may use diesel fuel to clean the DPF (Diesel Particulate Filter). When checking fuel usage please be aware of the additional fuel used during regeneration of the DPF.

AIR INFLATION AND PRESSURE MONITORING SYSTEMS

Proper inflation pressure is critical to the overall performance of all tires on the road today.

Today's radial truck tires will lose less than one psi per month due to air migration through the casing. Faster loss of inflation can only occur in conjunction with some sort of leak in the wheel, valve stem, or tire structure. Whatever the source of the leak, it must be identified and corrected to avoid further damage to that component, possibly leading to a compromise in safety.

AVAILABLE SYSTEMS

Tire Pressure Monitoring Systems (TPMS) have been legislated for all vehicles by the TREAD Act (Transportation Recall Enhancement, Accountability, and Documentation). The implementation schedule is in place for vehicles with gross vehicle weight (GVW) below 10,000 lbs, but is yet to be determined for heavier vehicles. The existing systems "read" the pressure in the tire via a sensor mounted on the valve stem, wheel, or inside the tire. Sensors that are not physically inside the tire and wheel cavity cannot accurately measure the internal air temperature, so they are unable to determine the "cold inflation pressure." In addition, external sensors may require additional inflation line plumbing that creates additional potential leak points.

Monitoring systems may provide either pressure data or a low pressure warning. The pressure data may be "hot" or "cold" pressure, so it is necessary that the person viewing that data fully understands which pressure is reported and what it means. Low pressure alarm systems only alert the driver when the pressure in a particular tire (or pair of dual tires if linked together) is below some fleet-chosen minimum. This value may be preset by the sensor supplier or may be programmable by the fleet. Tire manufacturers, through the U.S. Tire Manufacturers Association (USTMA), have agreed that a tire must be considered flat if the inflation pressure is 20% or more below the pressure recommended for that tire. A flat tire must be removed from the wheel, thoroughly examined, and properly repaired prior to re-inflation and use.

Some systems provide inflation pressure information at the sensor site only, so the driver must walk around the vehicle to gather/view either the pressure reading or low pressure warning. Other systems transmit the information to the cab where it may be viewed by the driver, and/or sent to a central facility if the vehicle is tracked by satellite.

NOTICE

Automated Tire Inflation Systems (ATIS) are not guarantees against low pressure situations. All vehicles should still be subject to pre-trip inspections, and systems operation should be verified routinely.

Automated Tire Inflation Systems (ATIS) are designed to add air to maintain a preset pressure but do not have the ability to reduce the pressure should a tire be over inflated. These systems can account for slower leaks (determined by the air delivery capacity of the system) and provide some warning to the driver when the system is energized (adding air) or when it cannot keep up with the leak. Almost all inflation-only systems use air from the vehicle air brake system, so they will be limited in max pressure and available volumetric flow. In addition, these systems are usually only applied to trailer axles where plumbing the air supply line is easier.

Even with the inflation system in place, routine manual inflation pressure checks are still required.

Tire inflation systems may add air to tires determined to be below some fleet chosen pressure. Some Automated Tire Inflation Systems (ATIS) will also allow pressure reduction on any tire on the vehicle to maintain some given pressure level. Such systems are rather expensive and more often

used only on specialty vehicles (Military, emergency response, National parks, etc.).

A key factor in any monitoring or inflation system is determining whether the target or set pressure is a "hot" pressure or a "cold" one. This should be discussed with your tire manufacturer's representative.

THE USE OF PRESSURE MONITORING AND INFLATION SYSTEMS WITH MICHELIN® TRUCK TIRES

In view of the increasing visibility and promotion for the use of pressure monitoring and/or inflation systems, Michelin takes the following position:

- Michelin has not and cannot test every system that is being marketed/manufactured for effectiveness, performance, and durability.
- The use of these systems does not nullify the MICHELIN® truck tire warranty unless it is determined that the system somehow contributed to the failure or reduced performance of the tire.
- Proper pressure maintenance is important for the optimal performance of the tires, so it is important to make sure the system can maintain the pressures needed and/or can detect accurately when the pressures are outside of the normal operating range(s) for the loads being carried.
- **It is the responsibility of the system manufacturer to ensure that the tires are inflated as rapidly as possible to the optimal operating pressure in order to prevent internal damage to the tires.**
- Michelin strongly urges the customer to put the responsibility on the system's manufacturer to prove and support their claims.

In addition to the foregoing, please refer to the MICHELIN® Truck Tire Warranty Manual (MWE40021) for a general discussion of what is and is not covered by the warranty.

AUTOMATED TIRE INFLATION SYSTEMS (ATIS) ON TRAILERS AND MISSED NAIL HOLES

Automated Tire Inflation Systems (ATIS) on trailers can sometimes make slow leaks caused by nails or other small objects penetrating the crown area of the tire undetectable. A slow leak can be compensated for by the air inflation system. The warning light of the ATIS system will only come on if the pressure in the tire drops below a certain percent (usually 10%) of the regulated preset pressure. Even when the pressure drops below this point, the light will go off if the system is able to restore and maintain the preset pressure.

The tires on trailers with ATIS systems should be visually inspected before and after use and any imbedded objects removed and the tire repaired. An undetected imbedded object remaining in the tire can allow air infiltration and consequently a possible catastrophic failure of the sidewall.

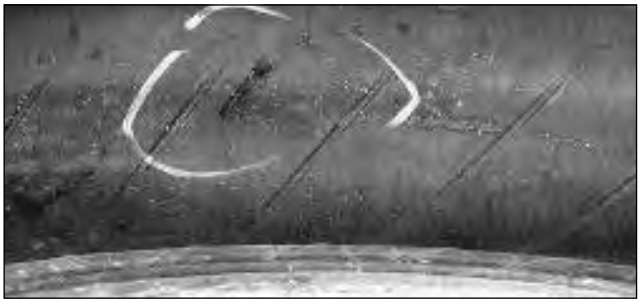

TRUCK TYPE BY WEIGHT CLASS FOR USE WITH X ONE® TIRES

CLASS 6 19,501 to 26,000 lbs. GVW	CLASS 7 26,001 to 33,000 lbs. GVW	CLASS 8 33,001 lbs. and over	TRAILER Weight: Not specified	NOTES
 TOW	 HOME FUEL	 FUEL	 DRY VAN	Recommended Applications Contact Michelin
 FURNITURE	 TRASH	 DUMP	 DOUBLES	
 STAKE	 FIRE ENGINE	 CEMENT	 LIQUID TANK	For information on the MICHELIN® X One® tire for the 4x2 application, refer to the next page.
 COE VAN	 SIGHTSEEING/COACH	 REEFER	 DRY BULK	**GVW – Gross Vehicle Weight** The total weight of the loaded vehicle includes chassis, body, and payload.
 SINGLE AXLE VAN	 TRANSIT BUS	 TANDEM AXLE VAN	 LOGGER	**GCW – Gross Combination Weight** Total weight of loaded tractor-trailer combination includes tractor-trailer and payloads.
 BOTTLER		 INTERCITY BUS	 PLATFORM	
 LOW PROFILE COE		 TANDEM REFUSE	 SPREAD AXLE	**GAWR – Gross Axle Weight Rating** Maximum allowable load weight for a specific spindle, axle, and wheel combination.
	GCW TO 65,000	GCW TO 80,000	 DROP FRAME	
	 HIGH PROFILE COE	 LOW PROFILE TANDEM COE	 DUMP	Identical vehicles may appear in different vehicle weight classes. This is because of a difference in the components installed in each vehicle such as engines, transmissions, rear axles, and even tires that are not readily discernible in the external appearance of those particular vehicles.
	 MEDIUM CONVENTIONAL	 HEAVY CONVENTIONAL	 REEFER	
		 HEAVY TANDEM CONVENTIONAL	 DEEP DROP	
		 HEAVY TANDEM CONVENTIONAL SLEEPER	 AUTO TRANSPORTER	
			 DOLLY	

RECOMMENDATION FOR USE OF MICHELIN® X ONE® TIRES IN 4x2 APPLICATIONS

4x2 Articulated Vehicles

Handling studies have indicated that for certain types of commercial single axle (4x2) tractors pulling trailers, handling may be degraded in the event of a rapid tire pressure loss when fitted with single tires. Michelin recommends that single axle tractors fitted with MICHELIN® X One® tires on the driven axle always be equipped with an Electronic Stability Program (ESP).

4x2 Straight Chassis Vehicles

Testing has indicated that handling of 4x2 straight chassis vehicles fitted with single tires on the drive axle may be degraded in the event of a rapid tire pressure loss, especially when coupled with panic braking. Class 6 and 7 straight trucks fitted with MICHELIN® X One® tires should also be equipped with anti-lock brake system (ABS) and/or ESP. Such degradation in handling has been observed both in curve, lane change, and straight line driving.

Michelin still maintains that all types of motor vehicles can be controlled in the event of a rapid tire pressure loss under normal, legal driving conditions. Vehicle control in a rapid tire pressure loss situation is a matter of driver education and training. To assist with this training, Michelin has produced a video entitled “Rapid Air Loss, Truck – The Critical Factor” to instruct drivers on how to handle a rapid tire pressure loss situation.

To view the video - “Rapid Air Loss, Truck – The Critical Factor” - please visit our web page at **www.michelintruck.com/reference-materials/videos/#/maintenance-and-training**. For additional information, please contact your local Michelin sales representative, or contact Michelin using the website www.michelintruck.com.

TIRE PRESSURE MAINTENANCE PRACTICES

Below is tire pressure maintenance advice for users of the MICHELIN® X One® wide single truck tires (445/50R22.5 LRL and 455/55R22.5 LRL).

Proper pressure maintenance is critical to obtain optimized performance from these tires. Due to the unique casing design of the MICHELIN® X One® tire, traditional pressure adjustment practices for dual tires may not apply to MICHELIN® X One® tires.

Cold inflation pressure should be based on maximum axle load in daily operation. Cold inflation pressures must not be lower than indicated in the tables below for actual axle loads. For additional information, please consult the MICHELIN® Truck Tire Data Book (MWL40731).

For example, load range L (20 ply) tires like the 445/50R22.5 MICHELIN® X ONE® LINE™ ENERGY D tires have a maximum pressure of 120 psi (cold) with a weight carrying capacity of 20,400 lbs. per axle. If the tire is mounted on a vehicle carrying 17,480 lbs. per axle, the appropriate pressure is 100 psi (cold).

For trailers equipped with a pressure monitoring system, system pressure should be regulated based on the maximum load the axle will carry and be at the cold equivalent for this load.

When an aluminum wheel is used in the outset position, the new TR553E valve should be used. It is recommended that you verify air valve stem torque on all wheels put into service. When installed, they should have correct torque, using the proper tool at 80 to 125 in./lbs.(7 to 11 ft./lbs.) for aluminum wheels and 35 to 55 in./lbs. (3 to 5 ft./lbs.) for steel wheels. To check for slow leaks at the valve stem, use either a torque wrench by hand or spray a soapy solution on the valve to see if it is loose. To prevent galvanic corrosion on aluminum wheels, lubricate the threads and o-ring of the valve stem with a non-waterbased lubricant before installation.

Wheel Diameter 22.5"	PSI	75	80	85	90	95	100	105	110	115	120	125	130	MAXIMUM LOAD AND PRESSURE ON SIDEWALL	
	kPa	520	550	590	620	660	690	720	760	790	830	860	900		
445/50R22.5 LRL **X ONE LINE ENERGY D** **X ONE LINE ENERGY T** **X ONE MULTI ENERGY T** **X ONE XDN2**	LBS SINGLE	13880	14620	15360	16060	16780	17480	18180	18740	19560	20400			S	10200 LBS at 120 PSI
	KG SINGLE	6300	6640	6960	7280	7620	7940	8240	8500	8860	9250			S	4625 KG at 830 kPa
455/55R22.5 LRL **X ONE XDN2** **X ONE MULTI ENERGY T**	LBS SINGLE	15000	15800	16580	17360	18120	18880	19640	20400	21200	22000			S	11000 LBS at 120 PSI
	KG SINGLE	6800	7160	7520	7880	8220	8560	8900	9250	9580	10000			S	5000 KG at 830 kPa
455/55R22.5 LRM **X ONE XZU S** **X ONE XZY3**	LBS SINGLE			16580	17360	18120	18880	19640	20400	21200	22000	22600	23400	S	11700 LBS at 130 PSI
	KG SINGLE			7520	7880	8220	8560	8900	9250	9580	10000	10240	10600	S	5300 KG at 900 kPa

* Single configuration, or 2 tires per axle.

COMPARATIVE MICHELIN® X ONE® TIRE SIZES WHEELS

MICHELIN® X One® Tire Size	MICHELIN® X One® Tire Revs./Mile	Dual Size	Dual Tire Revs./Mile
445/50R22.5	515 (X One® XDN®2)	275/80R22.5	511 (XDN®2)
455/55R22.5	492 (X One® XDN®2)	11R22.5 or 275/80R24.5	495 (XDN®2)

The MICHELIN® X One® tire requires the use of 22.5 x 14.00" wheels. Both steel and aluminum wheels are currently available in 0", 0.56", 1" and 2" outsets. The majority of the wheels currently offered have a 2" outset. Outset: The lateral distance from the wheel centerline to the mounting surface of the disc. Outset places the wheel centerline outboard of the mounting (hub face) surface. Inset places the wheel centerline inboard of the mounting (hub face) surface or over the axle. Thus a wheel with a 2" outset has the centerline of the wheel base 2" outboard from the hub mounting surface.

Some axle and hub manufacturers have recently clarified and confirmed their position concerning the use of such wheels with their respective components. While the position of the component manufacturers is not totally consistent, the majority's view concerning the retrofit of duals with MICHELIN® X One® tires can be summarized as follows:

Axle Type*	Spindle Type	Wheel Recommendation
Drive axles	"R"	0" to 2" outset wheels**
Trailer axles	"P"	2" outset wheels
Trailer axles	"N"	Check with component manufacturer.

* Many other axle and spindle combinations exist. Contact axle manufacturer.
** Contact axle manufacturer before retrofitting 2" outset wheels.

NOTE: Use of outset wheels may change Gross Axle Weight Rating (GAWR). Consult vehicle and component manufacturers.

MICHELIN® X ONE® TIRE MOUNTING INSTRUCTIONS

The MICHELIN® X One® tire must be mounted on 22.5 x 14.00" size wheels. Both steel and aluminum are available in Hub (Uni Mount) piloted, and currently aluminum is available in Stud (Ball Seat) configuration. Supplemental parts will be required with 'Stud-Piloted' wheels; i.e. front and rear outer cap nuts to replace inner and outer nuts used for mounting traditional stud-piloted dual assembly. Wheel specific questions should be directed to the wheel manufacturer. To ensure proper stud length, there should be 4 threads visible from the nut. There are no differences in mount or dismount procedures other than when mounting the MICHELIN® X One® tire onto a vehicle, position the tire so that the tire sits on the outbound side of the wheel similar to where the outer dual would normally be positioned. Additionally, this will offer exceptional lateral clearance. Select a valve stem that can be accessed for pressure checks and is installed facing outward.

Incorrect Lateral Clearance

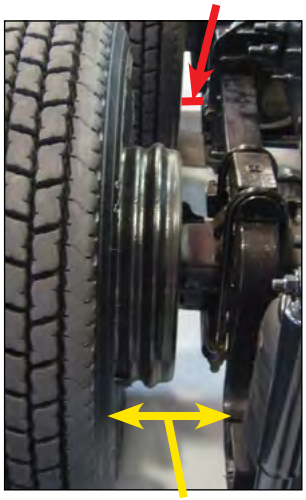

Correct Lateral Clearance

NOTE: Safety cages, portable and/or permanent, are also available and required for inflation of the MICHELIN® X One® tire assemblies.

HEAT STUDY

BRAKE HEAT OVERVIEW

Truck brake often reach very high temperatures. Brake drums can reach temperatures of 600°F or more and are in very close proximity to the wheels. This heat can be easily transferred to the wheels and tires. Brake drum heat is transferred to the wheel primarily through radiation and convection. The hot brake drum radiates heat in all directions to the wheel. In addition, the drum heats the air between the drum and the wheel. The heated air rises and transfers additional heat energy to the wheel through convection. Much of the heat is transferred to the wheel in the bead mounting area due to its close proximity to the brake drum. The wheel then directly conducts heat to the tire bead resulting in elevated temperatures in the tire bead area.

Duals – Close to Brake Drum

Excessive bead heat can affect tire life in many truck tire applications. Vehicles in urban and refuse service are most commonly associated with bead heat issues, but any application that experiences hard braking can be affected.

Results of bead heat:

1. **Immediate Failure:** In some cases, after periods of hard braking where brake drums reach very high temperatures (in excess of 600°F), immediate failure can occur. This normally occurs when a truck is brought to a stop for a period of time with very high brake temperatures. Often this occurs when an over-the-road truck stops at a truck stop at the bottom of a long descent. As the heat rises from the brake drum, there is excessive heat buildup in the portion of the tire bead directly above the brake drum (inner bead of inside dual). The high temperature can cause a breakdown of the rubber products in the bead area and allow the steel body cables to unwrap from the bead. This process results in a tire rapid tire pressure loss. This phenomenon is also common in urban and refuse fleets when the driver stops for a break after a period of hard braking.
2. **Degradation of the carcass: Heat is a tire's worst enemy!** A tire subjected to high heat conditions over an extended period of time will experience accelerated aging of the rubber products. The degradation may result in a blowout during operation, or it may render the casing unsuitable for retread. The graph below demonstrates how operating with bead temperatures in excess of **200°F** will significantly reduce your casing life.

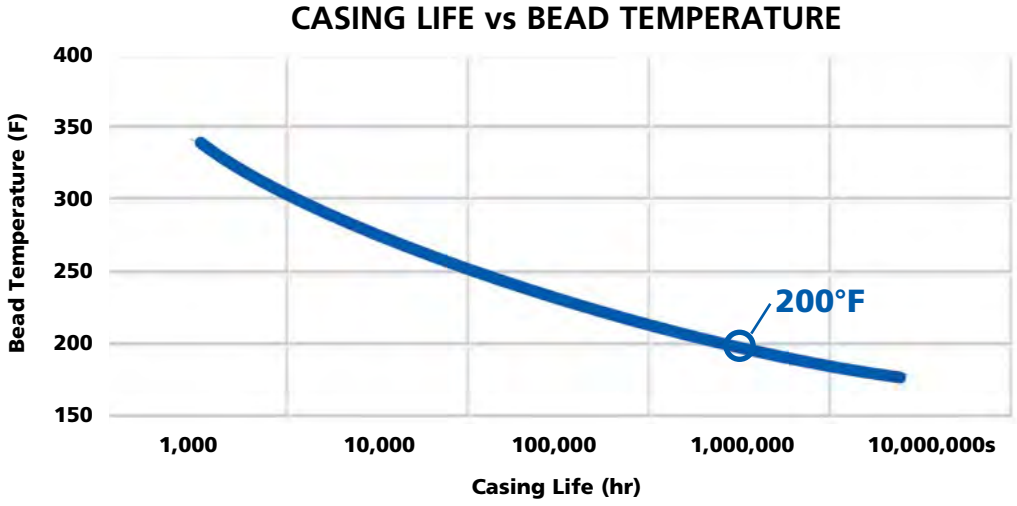

Bead damage as a result of brake heat is recognizable in 3 stages of severity. In the first stage, the bead starts to turn inward. This can be visibly identified on the tire when it is dismounted. A straight edge placed across the beads from one bead to the other no longer rests on the bead point, but now rests closer to the bead bearing area.

1st Stage – Turning of the Bead

The second stage occurs when the rubber in the bead area starts to split or crack indicating that the steel casing plies are starting to unwrap.

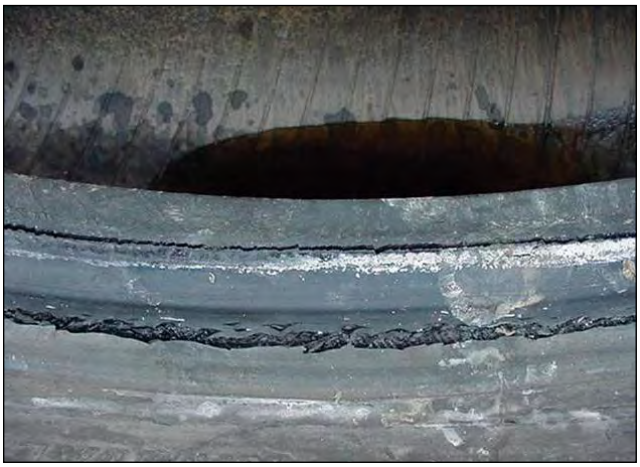

2nd Stage – Bead Splitting from Heat

The third stage is when the casing ply fully unwraps from the bead. In extreme cases, the casing ply unwraps from the bead all the way around the tire. At this point the tire completely separates from the bead wire. The bead wire can entangle itself around the axle if this type of separation occurs.

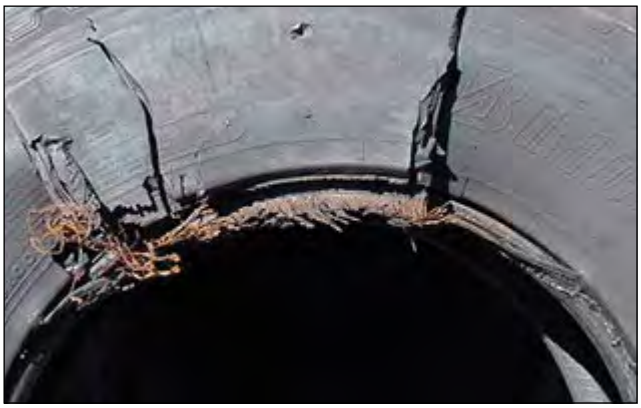

3rd Stage – Partial Unwrapping of the Casing Ply

3rd Stage – Complete Unwrapping of the Casing Ply

BRAKE HEAT EVALUATION: MICHELIN® X ONE® TIRES VS DUALS

MICHELIN® X One® tire fitments have greater clearance between the brake drum and the bead of the tire compared to a dual assembly. In addition, due to the 2" outset of the wheel for the MICHELIN® X One® tires, more brake drum is exposed, which provides greater air flow around the drum. These characteristics reduce the heat transfer from the brakes to the tire and allow the brakes to run cooler.

Exposed Brake Drum

This effect was demonstrated on a closed course at the Laurens Proving Grounds, Michelin's 3,000 acre test facility.

The Test

A 4x2 straight truck outfitted with a temperature logging device was loaded to maximum legal limits and operated on a closed course with almost continuous starting and stopping cycles. The truck was brought up to 30 mph and then stopped repeatedly for 45 minutes. The temperature logging device recorded brake drum and wheel temperatures (in the bead area) every 10 seconds. The test was run on both MICHELIN® X One® tires and duals at similar track temperatures and weather conditions.

After 45 minutes, when the brakes were at their peak temperature, the temperatures from the data loggers were compared. The brake drums fitted with MICHELIN® X One® tires were over 100°F cooler and the wheels were over 30°F cooler in the bead area than when equipped with Duals!

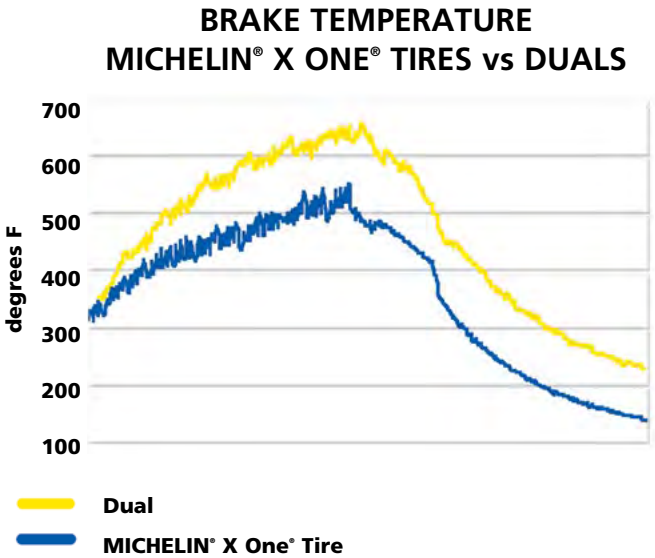

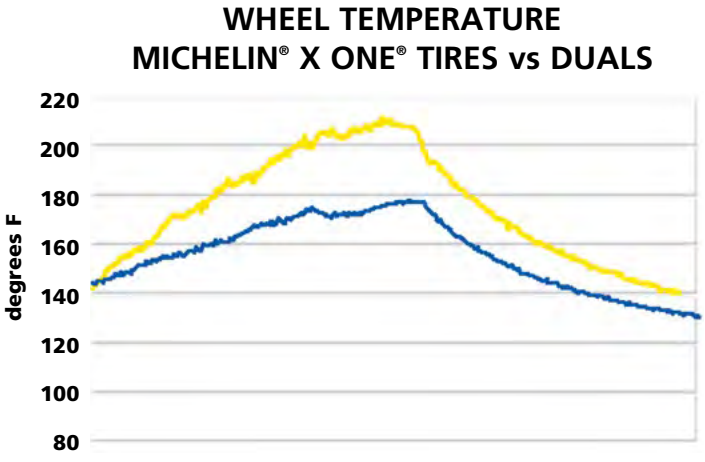

Source: Recent evaluations at a Michelin facility in South Carolina.

Thermal Imaging

The thermal image photos were captured after the repeated stopping test followed by 30 minutes of driving without braking. A brake drum temperature advantage for the MICHELIN® X One® tire of 90°F was still apparent even after the cool down period.

It is safe to say that for any given truck, brake temperatures on MICHELIN® X One® tire equipped vehicles will be significantly cooler than brakes on trucks running conventional duals. This effect will be most pronounced during periods of heavy braking but will persist for some time after braking has ended.

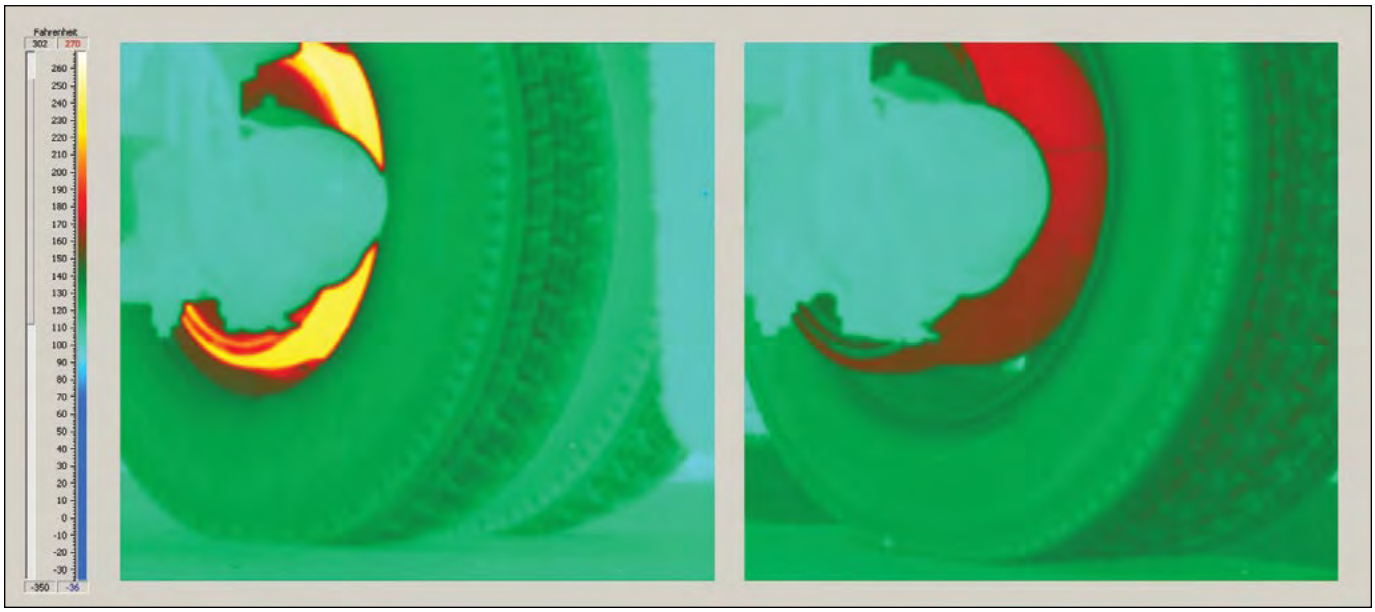

Dual Tires
Max temp ~ 215°F

MICHELIN® X One® Tire
Max temp ~ 180°F

Source: Recent evaluations at a Michelin facility in South Carolina.

TIME LABOR STUDY – MICHELIN® X ONE® TIRE VS DUAL ASSEMBLY

MICHELIN® X ONE® TIRE ASSEMBLY

- One tire and wheel: deflating, demounting, re-mounting, and re-inflating.
- Average time for one assembly is around 13-14 minutes.

Lubricating Beads for Dismount

Demounting MICHELIN® X One® Tire

Re-mounting MICHELIN® X One® Tire

Re-inflating MICHELIN® X One® Tire

DUALS ASSEMBLY

- Two tires and wheels: deflating, demounting, re-mounting, and re-inflating.
- One inflation line.
- Average time for two assemblies is around 18-19 minutes.

Demounting Dual

Re-mounting Dual

Having a second inflation line will cut down the time by about one third. With multiple inflation lines, the time is similar to the MICHELIN® X One® tire.

MOUNTING ON VEHICLE – MICHELIN® X ONE® TIRE

Mounting MICHELIN® X One® Tire on the Vehicle

HUB PILOTED SINGLE

1 assembly
10 flange nuts (Either side)

STUD PILOTED SINGLE

2 assemblies
10 Cap nuts (Left side)
10 Cap nuts (Right side)

(22 Parts)

MOUNTING ON VEHICLE – DUALS

Mounting Dual on the Vehicle

HUB PILOTED DUAL

2 assemblies
10 flange nuts (Either side)

STUD PILOTED DUAL

4 assemblies
10 inner cap nuts (Left side)
10 inner cap nuts (Right side)
10 outer cap nuts (Left side)
10 outer cap nuts (Right side)

(44 Parts)

In addition, dual wheels must be clocked for valve stem access through the hand holes.

Mounting on hub-centered axles for the MICHELIN® X One® tire or Dual should take ~ 2 minutes for each axle end. While mounting Dual on axles with stud-centered hubs, additional time is required due to the installation of an inner and outer nut for each stud and having to line up hand holes.

TORQUE

Once the tire and wheel assembly is mounted onto the axle end using an air gun, the final torque of each wheel nut must be applied using a calibrated torque wrench to 450-500 foot-pounds. This is a safety procedure that will help prevent loose and broken components and potential wheel-offs.

Torque Wrench

RETREAD AND REPAIR RECOMMENDATIONS

MICHELIN® X ONE® TIRE RETREAD AND REPAIR RECOMMENDATIONS

The MICHELIN® X One® tire may require some special equipment to handle the wider tread and casing, it does not require any special procedure to be repaired or retreaded. As with any tire, special care should be given to respect the recommendations and guidelines associated with the specific product to ensure optimum performance.

INITIAL INSPECTION

Inspect the MICHELIN® X One® casings as defined by your retread process manufacturer or industry recommended practices using appropriate equipment.

When using an electronic liner inspection device (such as the Hawkinson NDT), a new wide base probe of at least 275 mm / 10.9 inches is required to insure sufficient and consistent cable contact with the shoulder/upper sidewall area. (Hawkinson part # PROBE ASSEMBLY 009).

It is recommended to slow the rotation speed or make several additional cycles to catch as many small punctures as possible.

SHEAROGRAPHY

If using laser shearography inspection adjust and or modify to insure complete imaging shoulder to shoulder, per equipment manufacturer. Also make sure the correct vacuum level is applied.

BUFFING

An expandable rim width of 14.5 inches is required. Buffing on a narrower rim can result in excess under-tread on the shoulder, thereby increasing the operating belt edge temperature. The beads of the casing should be lubricated with a fast drying tire lubricant. Runs of MICHELIN® X One® tires should start with new blades which should be changed as soon as the buff texture starts to degrade. Buffing should not start before the casing reaches target pressure in the expandable rim as defined by your retread process manufacturer. Recommended minimum inflation pressure is 1.2 bars or 18 psi, maximum inflation pressure is 1.5 bars or 22 psi. Recommended buffing radius for pre-cure flat treads (w/o wings) is 1700 mm ± 50 mm or 67 inches ± 2 inches.

USING BUFFING TEMPLATES

Check buff radius with the template after removing the tire from the buffer. A 2 mm gap is acceptable in the center of buffed surface when checking with the template.

NOTE: 1700 mm Buffing Template as available from TECH INTERNATIONAL (1-800-433-TECH/1-800-433-8342) See Pictures 1 and 2.

Picture 1 - Buffing Template

Picture 2 - Buffing Template

Recommended tread width ranges are given on Page 68 and may vary depending on the type and condition of the MICHELIN® X One® casing. The MICHELIN® X One® casing's finished buffed measured width should follow the same standards as other casings: **tread width + 8 mm/-2 mm.**

AFTER BUFF INSPECTION

If after buffing, circumferential cracks or splits remain in one or both shoulders of the tire in the vicinity of the outside tread groove (Picture 3), the crack or split should be probed. If the probing penetrates into steel or feels soft/loose material, the casing should be rejected. This should not be confused with a 360 degree product interface line that sometimes is visible after buff (Picture 4). If this line is visible, it should be probed and if found to be loose material, reject the casing. If it is tight, continue the retread process.

Picture 3

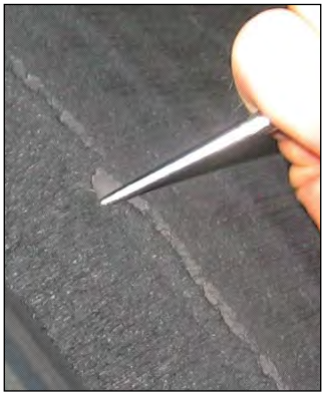

Picture 4

BUILDER

Expandable rim width of 14.5 inches is required.

Tread table rollers should be completely cleaned before and/or after each build series. The base of the wider MICHELIN® X One® tread will come in contact with the roller's outer edges, so care should be taken to prevent contamination by cleaning the rollers at frequent intervals.

Tread building should not begin until tire pressure has reached the target inflation pressures in the expandable rim as defined by your retread process manufacturer.

For cushion to casing extruded bonding gum application, recommended minimum inflation pressure is 0.8 bar or 12 psi. Bonding gum thickness should not exceed 1.5 mm (2/32 inch) in the crown and 2.5 mm (3/32 inch) in the shoulders.

Note: For non-Michelin wing tread products, contact MRT Duncan, SC at 1-888-678-5470, then press 3 for Technical Support.

ENVELOPING

Contact your envelope supplier for the recommended size envelopes to be used.

CURING

Cure the MICHELIN® X One® casing according to cure law for the tread design per the retread process manufacturer.

FINAL INSPECTION

Perform a final inspection of the MICHELIN® X One® casing according to the retread process manufacturer work method and specification.

Note: The retreader is still responsible for determining if the MICHELIN® X One® casing is capable of being retreaded; the same as would be done for any other tire in the inspection process.

Principal Components

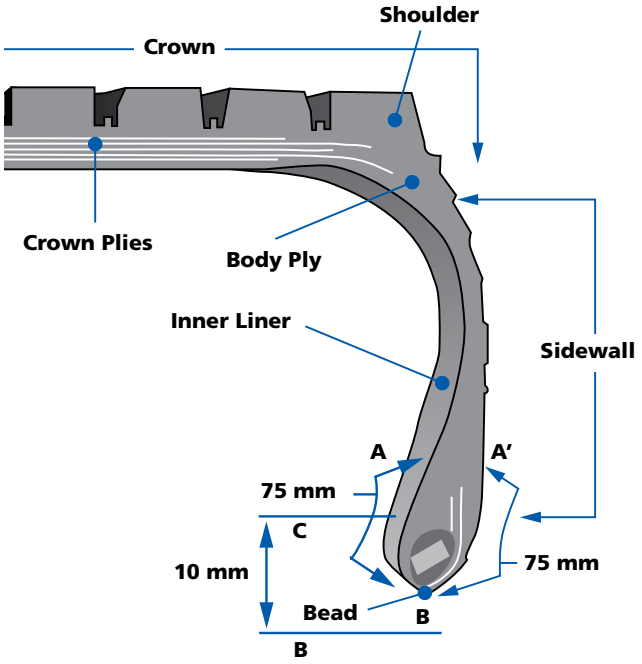

Note: For truck sizes, point B is considered the "toe" of the bead. Point A is found 75 mm from point B towards the interior of the casing, and point A' is also 75 mm from point B but is located on the exterior of the casing. Point C is located 10 mm from point B (measured as shown). Any repair patch material must be positioned ≥10 mm from the toe of the bead (point B).

Damage Guidelines

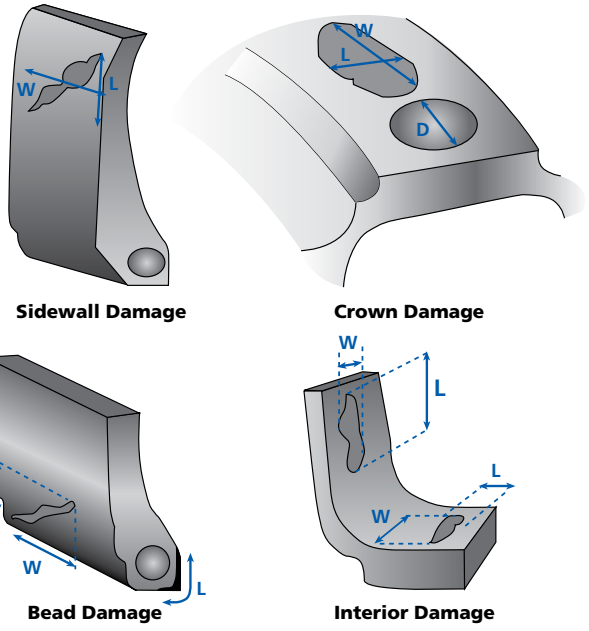

REPAIR RECOMMENDATIONS

Type of Repair	Application	Quantity Limits	Size Limits
Spot Repair (no body ply affected)	Long Haul, Pickup & Delivery (P&D)	Max 10 per sidewall	No limit
	Severe Service	Max 20 per sidewall	No limit
Bead Repairs (rubber damage only)	All	Max 4 per bead	Max width: 150 mm *(6 in)* Min distance between repairs: 75 mm *(3 in)*
	Severe Service (bead toe repair only)	No limit	L = 2 mm x W = 50 mm *(1/16 in. x 2 in)* Min distance between repairs: 75 mm *(3 in)*
Bead Repairs (chafer strip)	All	Max 4 per bead	L = 25 mm x W = 55 mm *(1 in. x 2 in)* Min distance between repairs: 75 mm *(3 in)*
Liner Repairs	All	No limit	If blister diameter is less than 5 mm *(3/16 in)*, leave intact; Repair between 5 mm *(3/16 in)* and 20 mm *(3/4 in)*
			If blister diameter is more than 20 mm *(3/4 in)*, reject casing
Buzzouts (protector ply of 3rd working ply)	Long Haul, P&D	Max 15 per tire	Max diameter: 40 mm *(1.6 in)* Max surface: 1600 mm² *(2.5 in²)*
	Severe Service	Max 60 per tire	Max diameter: 40 mm *(1.6 in)* Max surface: 1600 mm² *(2.5 in²)*
Buzzouts (2nd working ply; Infinicoil)	Long Haul, P&D	Max 3 per tire	Max diameter: 30 mm *(1.2 in)* Max surface: 900 mm² *(1.4 in²)*
	Severe Service	Max 20 per tire	Max diameter: 30 mm *(1.2 in)* Max surface: 900 mm² *(1.4 in²)*
Nail Hole Repairs	All	Max 5 per tire	Max diameter: 10 mm *(0.4 in)*
Section Repairs	All	Max 2 per tire	Crown Max diameter: 25 mm *(1.0 in)*
			Sidewall L 70 mm x W 25 mm *(2.8 in x 1.0 in)* L 90 mm x W 20 mm *(3.8 in x 0.8 in)* L 120 mm x W 15 mm *(4.7 in x 0.6 in)*

For up to 6 mm nail hole repairs in the shoulder area, the repair unit should be upsized (larger than CT20) and offset to move the reinforcement end as far away from the maximum flex area as possible.

RETREAD RECOMMENDATIONS

Casing Size	Buff Radius [1]	Circumference	Tread Width		
			Tread Type	Min	Max
445/50R22.5	1700 mm (± 50 mm) or *67 inches (± 2 inches)*	3070 mm or *121 inches*	Flat Tread	380 mm	390 mm
			Wing Tread [2]	375/420 mm	385/430 mm
455/55R22.5	1700 mm (± 50 mm) or *67 inches (± 2 inches)*	3225 mm or *127 inches*	Flat Tread	390 mm	400 mm
			Wing Tread [2]	385/430 mm	395/440 mm

1. For MRT Custom Mold™ Retread the buff radius should be 2200 mm *(87 in)*.
2. For non-Michelin wing tread sizes contact MRT Technical Support at 1-888-678-5470, Option 3.

CHAINS*

Depending on the state in which you are traveling, chains may or may not be required. If chains are required, several companies have chains available for the MICHELIN® X One® tire. The thing to remember when purchasing chains for your MICHELIN® X One® tire is the tire size, as the 445/50R22.5 chains don't fit the 455/55R22.5 and vice versa. For more information, consult your local dealer or go to www.tirechains.com.

* The information provided is for reference only. Chain-specific questions should be directed to the chains manufacturer.

GEAR RATIO

A change in tire dimension will result in a change in engine RPM at a set cruise speed** that will result in a change in speed and fuel economy. The effect of tire size change on gear ratio should be considered in individual operations.

A decrease in tire radius will increase tractive torque and increase indicated top speed. An increase in tire radius will reduce tractive torque and decrease indicated speed.

Tire Revs./Mile – Speed – Size: These factors can affect engine RPM if corresponding changes are not made to engine ratios.

Example: Going from larger diameter tire to smaller diameter tire.

If you currently run a 275/80R22.5 MICHELIN® XDN®2 tire (511 Tire Revs./Mile) and change to a 445/50R22.5 MICHELIN® X One® XDN®2 tire (515 Tire Revs./Mile), the speedometer will indicate a slightly higher speed than the actual speed the vehicle is traveling.

$$\frac{\text{Final Tire Revs./Mile} - \text{Initial Tire Revs./Mile}}{\text{Initial Tire Revs./Mile}} =$$

$$\frac{515 - 511}{511} = 0.0078 \text{ or } 0.78\% \ (< 1\% \text{ change})$$

So when your actual speed is 60 mph, your speedometer will read 60.47 mph.

** Exceeding the legal speed limit is neither recommended nor endorsed.

MICHELIN® X One® Tire Size	MICHELIN® X One® Tire Tire Revs./Mile
445/50R22.5	515 (X One XDN2)
Dual Size	**Dual Tire Revs./Mile**
275/80R22.5	511 (XDN2)

MICHELIN® X One® Tire Size	MICHELIN® X One® Tire Tire Revs./Mile
455/55R22.5	492 (X One XDN2)
Dual Size	**Dual Tire Revs./Mile**
11R22.5 or 275/80R24.5	496 (XDN2)

FOOTPRINT COMPARISONS TO DUAL TIRE FITMENTS

MICHELIN® X ONE® XDN®2 TIRE – 445/50R22.5 versus MICHELIN® XDN®2 TIRE – 275/80R22.5

Take notice that switching to single tire fitments causes a slight reduction in footprint area when compared to dual. This will not have a negative impact on your traction.

The MICHELIN® X One® tire footprint will be dependent on pressure recommendations and vehicle loads. One should always select a pressure that will adequately support the loads your fleet encounters as defined in the MICHELIN® Truck Tire Data Book (MWL40731). Overinflation of the MICHELIN® X One® tires will not only reduce the footprint but can adversely affect handling, wear, and ride characteristics. Overinflating tires may also result in exceeding the wheel's maximum pressure.

445/50R22.5 MICHELIN® X ONE® XDN2® AT 100 PSI

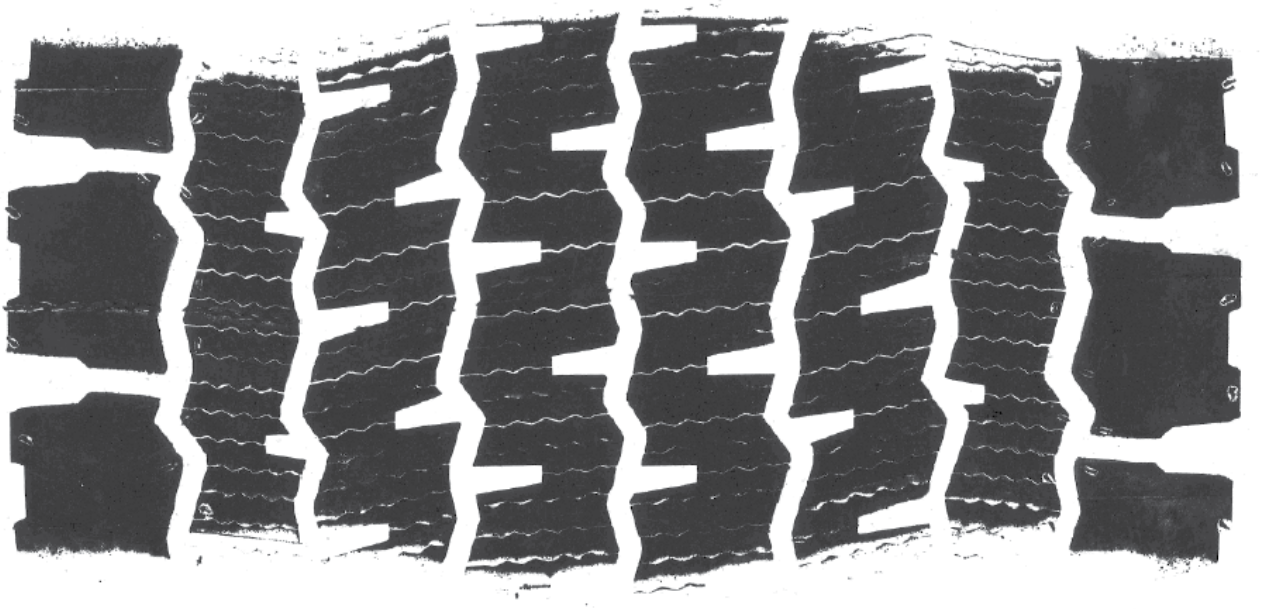

120 PSI FOOTPRINT OVERLAID ON 100 PSI FOOTPRINT

The photo below demonstrates what occurs to the footprint when you overinflate the same tire to 120 psi. The overinflated footprint's length and width are reduced (black footprint) when compared to 100 psi footprint (gray footprint).

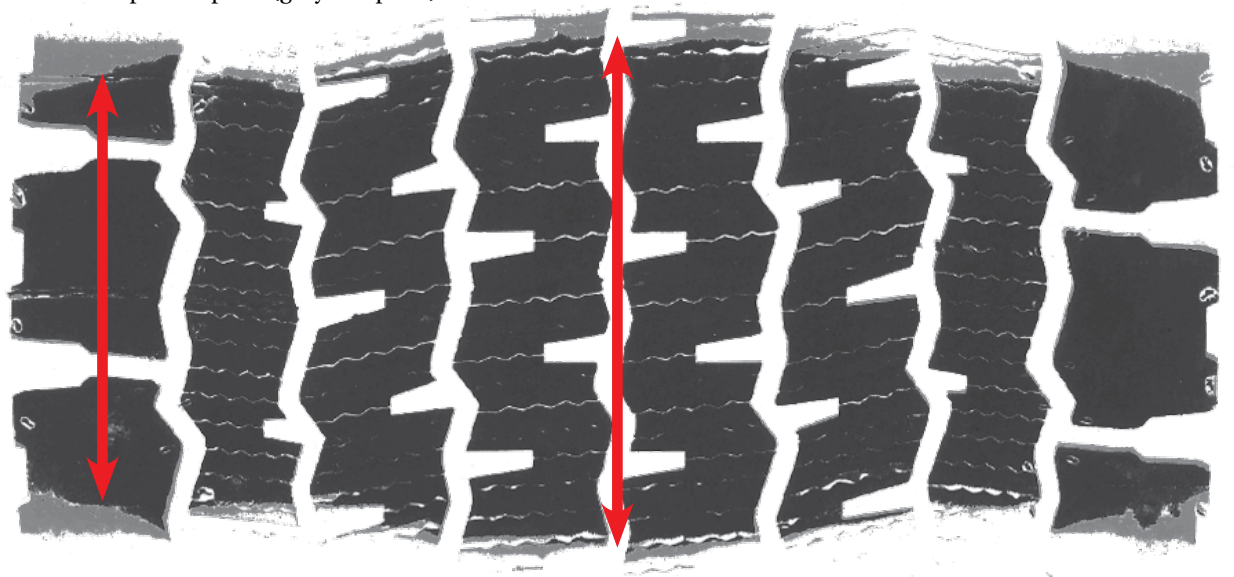

Shoulder: -22 mm **Center: -12 mm**

OPERATION AND HANDLING

OVER-STEER

Over-steer is when the rear wheels are carving a larger arc than the front wheels or the intended line of the turn. This is often described as a "loose" condition, as the truck feels like the rear end is coming around.

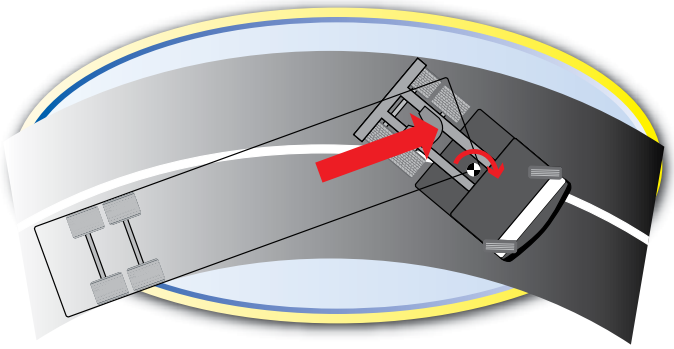

Over-steer: Very Difficult to Correct

UNDER-STEER

Under-steer is when the front wheels are carving a larger arc than the rear wheels. This is often described as "push" or "pushing," as the front end feels like it is plowing off of a corner.

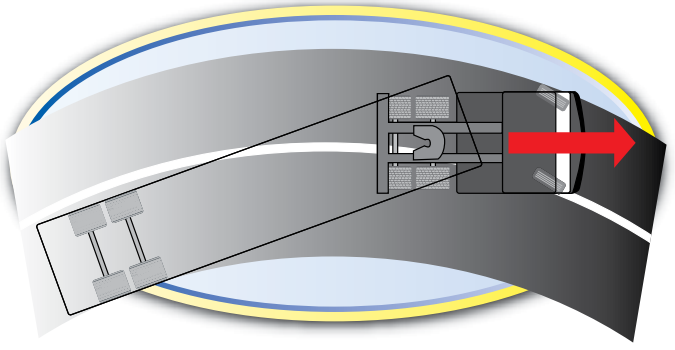

Under-steer: Very Easy to Correct

Over-steer is dangerous because once the rear end comes around, the vehicle is uncontrollable and may enter a spin. Braking only makes this condition worse. Under-steer is the more desirable condition because you have direct control over the front tires, and deceleration usually corrects the condition.

The MICHELIN® X One® tire has a higher cornering stiffness and can generate more lateral force than standard dual drive tires. Increasing cornering stiffness of the rear tires promotes under-steer. Additionally, it will take more force to jack-knife the vehicle.

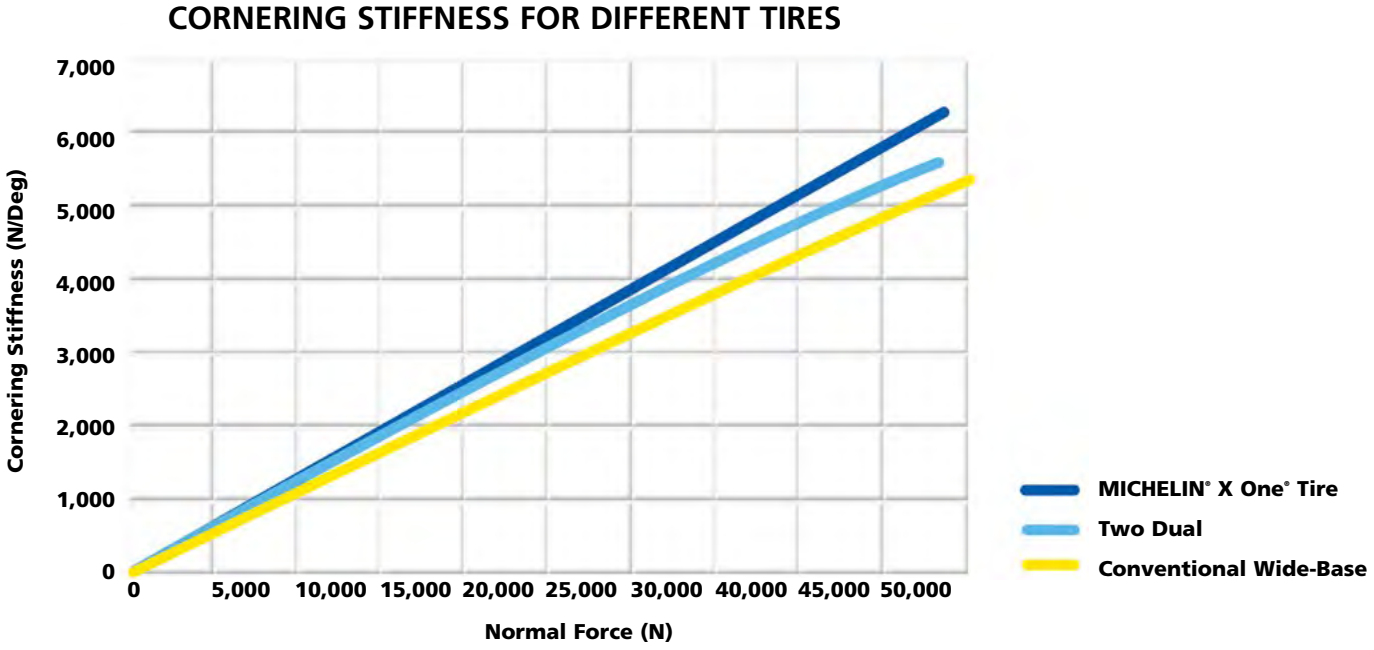

Source: Recent evaluations at a Michelin facility in South Carolina.

HYDROPLANING

Hydroplaning occurs when the tire loses contact with the road. This can happen when the water pressure exceeds the contact pressure between the tire and the road.

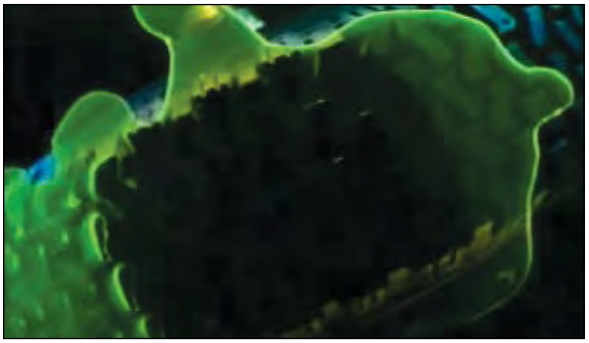

Factors that increase likelihood of hydroplaning:

– Excess water
– Excessive speed
– Low tread depth
– High tire pressure
– Light loads or bob-tailing

In other words, if rain is pouring down and water is pooling, the truck's speed needs to decrease in order to avoid hydroplaning.

A tire's contact pressure can reduce your chance of hydroplaning. The MICHELIN® X One® tire has higher contact pressure at the edge of the tread, which provides a wider "sweet spot" than dual tires. In the graph below, you can see that the contact pressure is slightly higher in the center and significantly higher at the shoulders over dual fitments. Note the drop in contact pressure for dual tires on the graph below.

For example, the contact pressure of a dual tire is about 90 psi compared to 116 psi for a MICHELIN® X One® tire. This will result in the dual tire losing contact with the road at lower speed than the MICHELIN® X One® tire. This means if hydroplaning occurs at 60 mph for the MICHELIN® X One® tire, it will occur at 53 mph on the dual.

Contact Pressure Ratio = $\sqrt{}$ (90/116) = 88%
or
60 mph x 0.88 = 53 mph

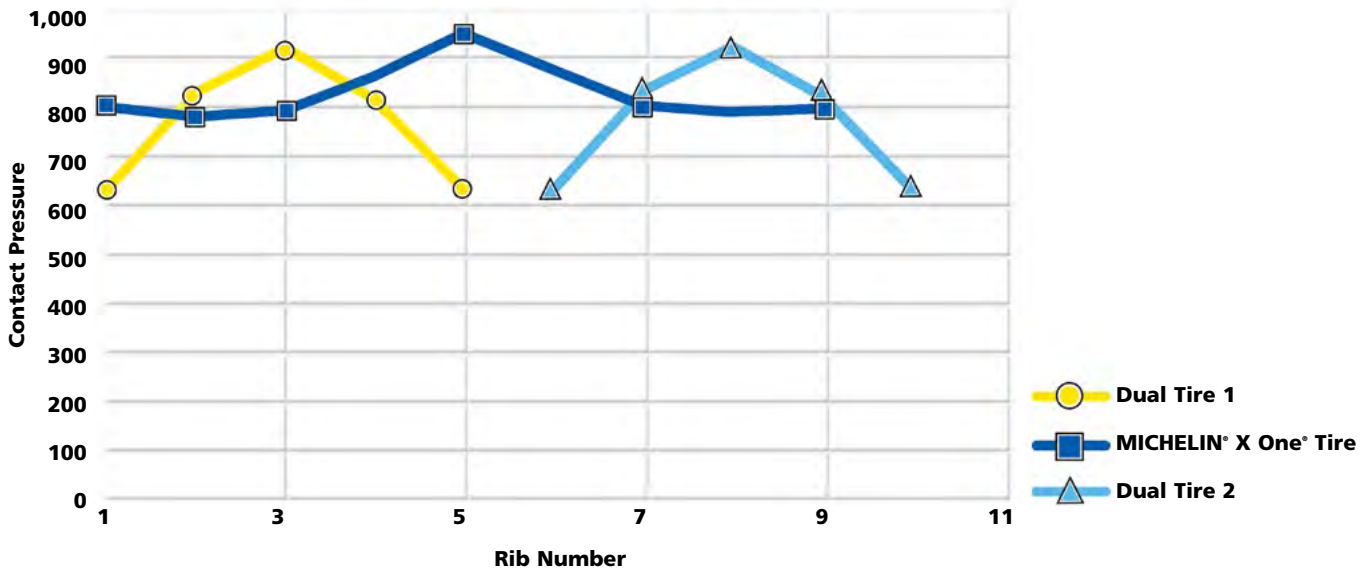

Source: Recent evaluations at a Michelin facility in South Carolina.

ROLLOVER THRESHOLD

There are two things you can change to make a vehicle more resistant to rollover:

– Lower the center of gravity
– Increase your track width

The MICHELIN® X One® tire does both.

First, the loaded radius of the 445/50R22.5 MICHELIN® X One® XDN®2 tire is 18.7". A 275/80R22.5 MICHELIN® XDN®2 tire (dual equivalent) loaded radius is 18.9". See chart below. For every inch you lower the Center of Gravity, you gain 3 mph additional safety factor with regard to rollover threshold.

Second, the track width is measured at the center of where the load is distributed on the ground. For dual, this would be measured at the center of the space between the dual. For the MICHELIN® X One® tire, it is simply measured from the center of the left side tire to the center of the right side tire.

As you can see, even though the overall width has reduced, the track width has increased on the MICHELIN® X One® tire.

In summary, the MICHELIN® X One® tire improves rollover threshold by increasing cornering stiffness, increasing track width, and reducing the center of gravity.

These improvements have been validated with:
1) Computer simulation where the whole vehicle is characterized mathematically.
2) Track testing at our internal proving grounds.
3) OE vehicle manufacturers in their independent testing, including tilt table testing.

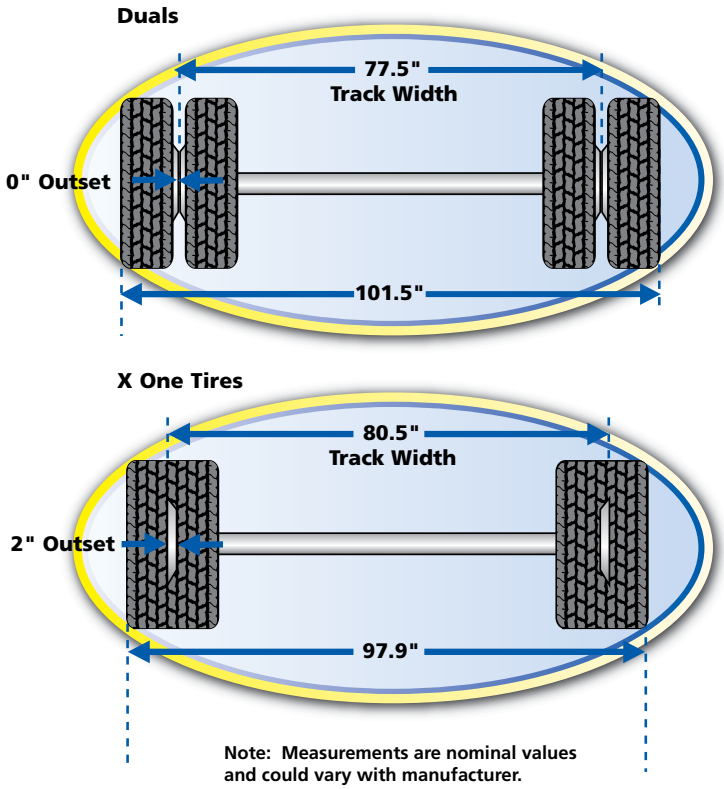

Note: Measurements are nominal values and could vary with manufacturer.

ROLLOVER THRESHOLD WITH TIRE SIZE

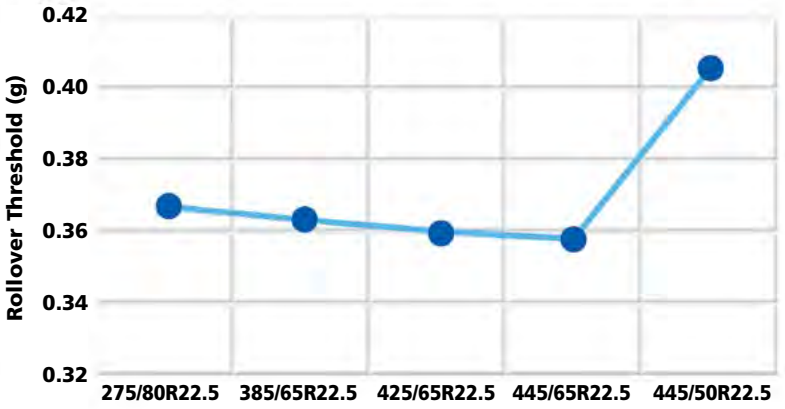

Source: Recent evaluations at a Michelin facility in South Carolina.

SPECIFICATIONS FOR TREAD DESIGN: MICHELIN® X ONE® XDN®2

Size	Load Range	Catalog Number	Tread Depth	Max. Speed (*)	Loaded Radius		Overall Diameter		Overall Width (‡)		Approved Wheel	Revs Per Mile	Max. Load and Pressure Single			
			32nds	mph	in.	mm	in.	mm	in.	mm			lbs.	psi	kg.	kPa
445/50R22.5	L	36587	27	75	18.7	474	40.4	1026	17.1	435	14.00	515	10200	120	4625	830

SPECIFICATIONS FOR TREAD DESIGN: XDN®2

Size	Load Range	Catalog Number	Tread Depth	Max. Speed (*)	Loaded Radius		Overall Diameter		Overall Width (‡)		Approved Wheels (Measuring wheel listed first.)	Min. Dual Spacing (‡)		Revs Per Mile	Max. Load and Pressure Single				Max. Load and Pressure Dual			
			32nds	mph	in.	mm	in.	mm	in.	mm		in	mm		lbs.	psi	kg.	kPa	lbs.	psi	kg.	kPa
275/80R22.5[10]	G	63465	27	75	18.9	481	40.6	1030	11.0	279	8.25, 7.50	12.2	311	511	6175	110	2800	760	5675	110	2575	760

JACK-KNIFE

When you put the tractor and trailer into an extreme turn or "jack-knife" situation, the trailer is very vulnerable to rollover.

Normally, traction has a positive influence on the handling of the truck. This is no longer true when you put a truck in a jack-knife condition. Whether dual or single configuration, you are forcing the tires to stop rolling and slide sideways. As the photo below clearly demonstrates, the trailer is twisting because the tires are holding their position on the road. This can lead to rollover!

This is especially true for spread axle trailers and high center of gravity loads. Look at the lateral stress placed on the tires from the jack-knife situation. Turning angles should be minimized to avoid rollover threshold whether operating with duals or MICHELIN® X One® tires.

Turning angles should be minimized to avoid rollover threshold whether operating with duals or MICHELIN® X One® tires.

NEVER exceed vehicle limitations because of improved handling.

A tire with a wider footprint is going to provide increased lateral stability when cornering. As a result of this increased lateral stability, the truck will have a tendency to lean less in turns. The increased lateral stability should not equate to increased speed. Always obey posted speed limits on the highways and curves. A good rule of thumb for vehicles with high rollover thresholds (i.e., tankers, concrete mixers) is to take the curves at the posted limit less 10 mph.

RAPID TIRE PRESSURE LOSS PROCEDURE

Even though the MICHELIN® X One® tire is an innovative product, it still requires proper pressure maintenance and visual inspection practices. Tire failure can and will occur.

Below you will find a handy reference of the procedure to bring the vehicle to a safe stop following a rapid tire pressure loss event:

Indications:

(Some or all of the following may apply.)

– No change in handling
– Slight lean (depending on wheel position)
– Vibrations
– Audible noise when rapid tire pressure loss occurs

Immediate Actions:

– Accelerate enough to maintain lane position. (**DO NOT** apply brakes immediately.)
– Do not apply maximum brake pressure to bring the vehicle to a stop. This stop should be gradual by pumping the brakes.
– Creating assembly lock-up can cause irrepairable damage to tire, wheel, axle components, and vehicle.
– Pull the vehicle to a safe area.
– Do not attempt to limp further down the road.

Secondary Actions:

– Turn on flashers
– Deploy safety triangles
– Inspect vehicle for damage
– Call for assistance

This can be simplified by remembering the following:

DROP ROLL and STOP

In other words, the vehicle lean or **DROP** may be the first indication of a rapid tire pressure loss. Don't jam on the brakes! Pumping the brakes will allow the damaged wheel end to **ROLL** to a **STOP** without lock-up.

There are many MICHELIN® X One® tire training videos including rapid tire pressure loss handling, and specific application demonstrations. To obtain one of these, contact your local Michelin dealer or the Michelin sales representative in your area.

TRACTION

Traction is dependent on the following variables:

– speed
– tread depth
– conditions (dry or wet, depth of water)
– tread design
– tread rubber compound
– road surface (concrete, asphalt)

CHAINS*

Depending on the state in which you are traveling, chains may or may not be required. If chains are required, several companies have chains available for the MICHELIN® X One® tire. The thing to remember when purchasing chains for your MICHELIN® X One® tire is the tire size, as the 445/50R22.5 chains don't fit the 455/55R22.5 and vice versa. For more information, consult your local dealer or go to www.tirechains.com.

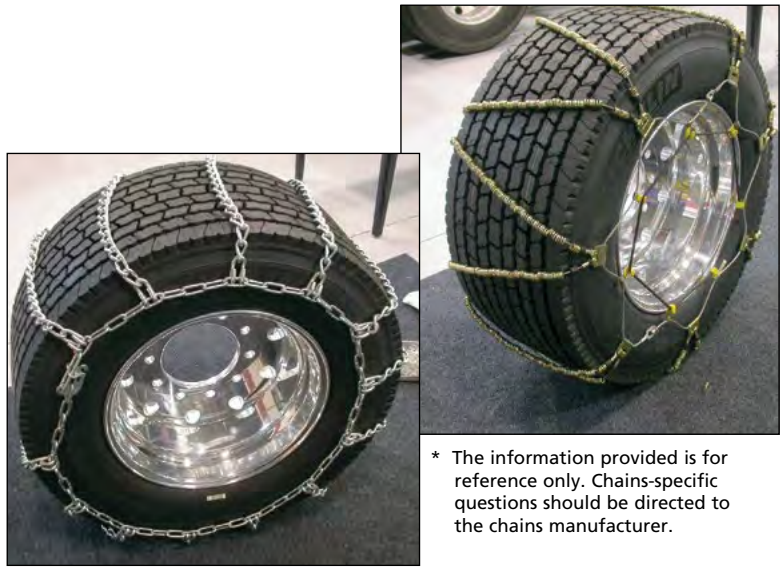

* The information provided is for reference only. Chains-specific questions should be directed to the chains manufacturer.

STOPPING DISTANCES

Stopping distance with the MICHELIN® X One® tire is similar to that of a vehicle in dual configuration. A general rule typically mentioned in Commercial Driver's License (CDL) manuals is to allow one vehicle length or one second between your vehicle and the one you are following for every 10 mph of your velocity. For example: if you are driving at 65 mph, allow 6.5 seconds between your vehicle and the one in front of you. A good way to practice this is to mark a spot, such as a bridge, road sign, etc., that the vehicle you're following has just passed and count one-one thousand, two-one thousand, etc., to see how long it takes you to reach the same point. If you count to only four-one thousand, then increase your following distance.

In wet and/or icy conditions, do not assume that because you have better traction you will be able to stop quicker. It is always the best practice to increase following distances and reduce driving speeds when traveling in adverse weather conditions.

LIMPING HOME

Limping on the MICHELIN® X One® tire can cause damage to the wheel and casing. Although the tire is down, it's possible that it is repairable unless it was run-flat. Limping home is never recommended even on dual tires. Limping is a direct CSA (Comprehensive Safety Analysis) violation.

DOT (Department of Transportation) Regulation 393.75 states:

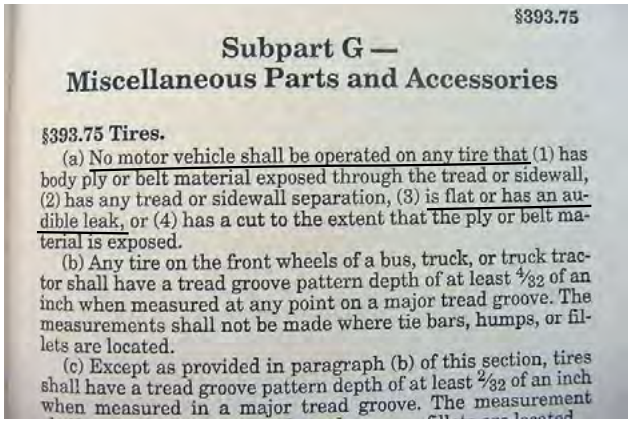

§393.75

Subpart G —
Miscellaneous Parts and Accessories

§393.75 Tires.

(a) No motor vehicle shall be operated on any tire that (1) has body ply or belt material exposed through the tread or sidewall, (2) has any tread or sidewall separation, (3) is flat or has an audible leak, or (4) has a cut to the extent that the ply or belt material is exposed.

(b) Any tire on the front wheels of a bus, truck, or truck tractor shall have a tread groove pattern depth of at least 4/32 of an inch when measured at any point on a major tread groove. The measurements shall not be made where tie bars, humps, or fillets are located.

(c) Except as provided in paragraph (b) of this section, tires shall have a tread groove pattern depth of at least 2/32 of an inch when measured in a major tread groove. The measurement

The following provides the top ten reasons not to limp home on any tire.

10 TOP REASONS NOT TO LIMP HOME

10. **Pavement Damage: when the tire is run to destruction, the wheel contact damages the road.**
9. **Wheel Damage: $$$ hundreds of dollars.**
8. **Destroyed Casing: it may have otherwise been repairable. $$$ hundreds of dollars.**
7. **Cargo Damage: load shifts, collisions, roll-overs or fires.**
6. **Collateral Truck Damage: fairings, tanks, hoses, brakes, hoods, mudflaps, etc.**
5. **Wheel and/or Tire Detachment: if the tire/wheel become detached, they become a projectile.**
4. **Adverse Handling Conditions: mishandled, a run-flat could lead to a jack-knife or even a roll-over.**
3. **Direct DOT Violation: fines/downtime/out-of-service.**
2. **Creating assembly lock-up can cause irrepairable damage to tire, wheel, axle components, and vehicle.**
1. **Endangers Other Vehicles and People: heavy duty truck accidents can be fatal.**

STATE AND LOCAL REGULATIONS

Some states have enacted "Load Per Inch Width" regulations for the purpose of governing axle weight on (primarily) the steering axle of commercial vehicles. These regulations provide a carrying capacity of a certain number of pounds per each cross-sectional inch across the tire's width. The determination of the tire's width can vary from state to state, but presumably would be based upon either the tire manufacturer's published technical data for overall width, or the width as marked on the sidewall of the tire (which may require conversion from Metric to English units). It is recommended to contact your state's DOT office to confirm the current "Load Per Inch Width" law.

For example, if a state allows for 550 pounds per inch width, a tire marked 445/50R22.5 could carry up to 9,636 pounds (17.52 x 550) or a total of 19,272 pounds on the drive axle (2 x 9636). Another way to look at it is to take the total weight carried and divide by the stated "Load Per Inch Width" law to determine the appropriate size tire. If a truck needs to carry 16,000 pounds an axle in a state with a 500 pound per inch width limit (16000/500 = 32), you would need a wide single tire that is at least 16 inches wide (32/2). In this case a 445/50R22.5 could legally carry the load (445 mm/25.4 mm per inch = 17.5 inches Metric to English conversion).

The two formulas are:

Load Per Inch Width Law x Tire Section Width x Number of Tires = Gross Axle Weight Limit

Gross Axle Weight/Inch Width Law/Number Of Tires = Minimum Tire Section Width Needed

State laws and regulations frequently can and do change, so it is recommended that you consult your local State or Province DOT and where you will be traveling to be sure there are no restrictions on the use of the MICHELIN® X One® tire for your particular operation, equipment, and weight.

SECTION SIX

MICHELIN® RV Tires

Section Six

MICHELIN® RV Tires 113-124

MAINTAINING RECREATIONAL VEHICLE TIRES 114-120

- The Importance of Inflation Pressure
- Inflation Pressure Requirements
- When to Check Recreational Vehicle Tire Pressure
- Tire Repairs
- Tread Depth Measurements and Wear Bars
- Dual Spacing
- Directional Tires
- Tire Pressure Monitoring Systems (TPMS)
- Nitrogen
- Workmanship and Materials
- Location of Tire Identification Code
- Service Life for Recreational Vehicle Tires
- Selecting Alternative Tire Sizes
- Drive at Proper Speeds
- Long Term Storage
- Aging, Weather Checking, and Ozone Cracking
- Proper Cleaning of RV Tires
- Tire Rotation, Balance, Alignment and Tire Wear
- Common Tire Damages

HOW TO WEIGH THE RECREATIONAL VEHICLE 121-124

- How to Weigh the RV
- Three Different Types of Scales
- Weighing the Single Axle Recreational Vehicle
- Weighing the Tandem Axle Recreational Vehicle
- The Effect of Towed Vehicles or Trailers
- How to Use the Actual RV Weight Information with the Tire Data Load Chart
- Using Blocks to Level Motorhomes and RVs Equipped with Radial Tires

For additional information about MICHELIN® RV Tires, refer to the

– www.michelinrvtires.com
– MICHELIN® RV Tires: Guide – MWL43146
– MICHELIN® Truck Tire Data Book – MWL40731

MAINTAINING RECREATIONAL VEHICLE TIRES

THE IMPORTANCE OF INFLATION PRESSURE

⚠WARNING **Never drive on an overloaded or underinflated tire.**

The most critical factor in tire maintenance is proper inflation. Driving on any tire that does not have the correct inflation pressure is dangerous and will cause tire damage. Improper pressure for the weight of the vehicle could cause premature wear, tire damage, or a harsher ride. The correct inflation pressure allows for full tread contact with the road surface and promotes traction, braking capability, and handling.

An underinflated or overloaded tire will build up more heat that could go beyond the endurance limits of the rubber, steel belts, and radial cords. This could cause sudden tire failure. Underinflation will cause poor handling, faster and/or irregular tire wear, and a reduction in fuel economy. Overinflation, on the other hand, will reduce the tire's contact area with the road surface, which reduces traction, braking ability, and handling. A tire that is overinflated for the weight it is carrying is more prone to a harsh ride, uneven tire wear, and impact damage.

INFLATION PRESSURE REQUIREMENTS

The amount of inflation pressure required in each tire depends on the weight of the fully loaded vehicle, to include passengers, cargo load, fuel, and water. To determine the correct inflation pressure, consider the various weight ratings that are posted on the recreational vehicle chassis, or within the recreational vehicle itself. The GVWR and the GAWR stickers are normally located on the support pillar next to the driver's seat.

MOTORHOME
WEIGHT INFORMATION

Model _____
GVWR _____
UVW _____
NCC _____
GCWR _____

GVWR (Gross Vehicle Weight Rating) means the maximum permissible weight of this motorhome. The GVWR is equal to or greater than the sum of the Unloaded Vehicle Weight plus the Net Carrying Capacity.

UVW (Unloaded Vehicle Weight) means the weight of this motorhome as built at the factory with full fuel, engine oil, and coolants. The UVW does not include cargo, fresh water, LP gas, occupants, or dealer installed accessories.

NCC (Net Carrying Capacity) means the maximum weight of all occupants including the driver, personal belongings, fuel, fresh water, LP gas, tools, tongue weight of towed vehicle, dealer installed accessories, etc., that can be carried by this motorhome. (NCC is equal to or less than GVWR minus UVW)

GCWR (Gross Combination Weight Rating) means the value specified by the motorhome manufacturer as the maximum allowable loaded weight of this motorhome with its towed trailer or towed vehicle.

This motorhome is capable of carrying up to _____ gallons of fresh water (including water heater) for a total of _____ pounds.
Reference: Weight of fresh water is 8.33 lbs/gal. Weight of LP gas is 4.5 lbs/gal (average).

CONSULT OWNER'S MANUAL FOR SPECIFIC WEIGHING INSTRUCTIONS AND TOWING GUIDELINES.

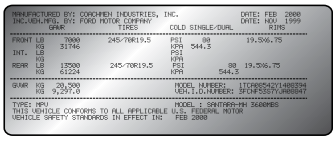
MANUFACTURED BY: COACHMEN INDUSTRIES, INC. DATE: FEB 2000
INC.VEH.MFG. BY: FORD MOTOR COMPANY DATE: NOV 1999
GAWR TIRES COLD SINGLE/DUAL RIMS
FRONT LB 7060 245-70R19.5 PSI 80 19.5X6.75
KG 31746 KPA 544.3
INT. LB PSI
KG KPA
REAR LB 13500 245-70R19.5 PSI 80 19.5X6.75
KG 61224 KPA 544.5
GVWR KG 26,500 MODEL NUMBER: 1TCG0SA2V1A00234
LBS 57,870.0 VEHICLE NUMBER: 1FDXE45S2VHA00847
TYPE: MPV MODEL : SPRINTER-MH 3668MBS
THIS VEHICLE CONFORMS TO ALL APPLICABLE U.S. FEDERAL MOTOR VEHICLE SAFETY STANDARDS IN EFFECT ON: FEB 2000

The GVWR (Gross Vehicle Weight Rating) is the maximum total weight rating for the recreational vehicle, to include passengers, fluids, and cargo.

The GAWR (Gross Axle Weight Rating) is the maximum weight allowed across a single axle.

The UVW (Unloaded Vehicle weight) is the weight of the recreational vehicle as built at the factory with full fuel, engine oil, and coolants. The UVW does not include cargo, fresh water, LP gas, passengers or dealer installed accessories.

The GCWR (Gross Combination Weight Rating) is the value specified by the recreational vehicle manufacturer at the maximum allowable loaded weight with a towed trailer or towed vehicle.

These ratings can vary based on the different components and vehicle options. To determine proper inflation pressure, Michelin recommends weighing each wheel position of the recreational vehicle individually. Weighing each axle end individually will give a clear indication of how the weight of the recreational vehicle is distributed across the axle. If there is a difference in the weight found from one side to the other, adjust personal cargo within the vehicle in order to redistribute the load more evenly across the axle.

For instructions on how to weigh a recreational vehicle, see pages 121-124.

NOTICE

REMEMBER: For control of the recreational vehicle, it is critical that the tire inflation pressures are set to the same inflation pressure across an axle.

WHEN TO CHECK RECREATIONAL VEHICLE TIRE PRESSURE

For optimum performance and handling, it is important to not only establish the proper inflation pressure, but it is also important to regularly inspect recreational vehicle tires for cuts, snags, and penetrations. Failure to maintain correct inflation pressure may result in sudden tire destruction and/or improper vehicle handling. Additionally, it will result in irregular tire wear. Check inflation pressures on all tires (including spares):

1. At a minimum, check weekly, and always before long distance trips.
2. On long trips, check every morning before driving.
3. Before and after storage, check and record tire pressures (a drop in pressure may indicate a slow leak).

The ideal time to check tire inflation pressures is early morning. Driving, even for a short distance, causes tires to generate heat, resulting in an increase in inflation pressure. The stated pressures found in published load inflation tables are based upon the cold tire inflation pressure at ambient outside temperature. A drop in ambient temperature results in a drop in tire pressure;

⚠WARNING

Never exceed the maximum load or pressure limits of the wheel. Exceeding the wheel limits can lead to component failure, serious accident, injury or death.

therefore, more frequent checks may be required during cold weather conditions. Avoid outdoor pressure checks when the temperature is below freezing, as ice can form in the valve stem and create a slow leak.

As a tire rotates during operation, it will naturally generate internal heat, resulting in an increase of inflation pressure. The pressure found in a "hot" tire may be as much as 10 – 15 psi higher than the inflation pressure found before operation. If checking tires after operation, compare the inflation pressure of all tires to ensure that they are within 2 - 3 pounds of each other across the axle.

NOTICE

Never bleed hot tires, or they will become underinflated.

Tire inflation pressures should be maintained across an axle at the same inflation pressure, especially in dual fitment. Make sure to check both tires in a dual fitment; pressures should be the same. The maximum allowable difference between tires across an axle is 5 psi. Use a quality, calibrated tire gauge to check inflation pressures, preferably a truck tire pressure gauge with a dual angled head. These gauges work best to check the inner and outer dual wheels. In addition, double seal valve caps and quality extension hoses simplify and expedite checking tire inflation pressures.

For example, if the recommended tire pressure across a rear dual axle is 80 psi, and one tire only has 64 psi, it is considered to be flat. This tire, as well as the tire in service next to it, should be removed from service by a tire technician immediately. A qualified tire technician should demount the tire to conduct a thorough tire and wheel inspection before returning them to service.

Underinflation in a dual configuration overloads the properly inflated tire. Both tires must be inspected.

TIRE REPAIRS

When a tire experiences a tread puncture, it may be safe to return it to service if it is properly repaired. A tire must be repaired from the inside so that a careful inspection can be made to the inner liner. The tire technician should use a combination plug and patch, where the rubber plug seals the damaged area from outside contaminants and moisture, and the patch reinforces the inner liner. Consult a Michelin tire dealer for a professional inspection and repair.

NOTICE

NEVER use a rope type string plug to repair a MICHELIN® tire. A rope plug is considered a temporary repair and often leaks over time. It is considered an improper repair and may void the MICHELIN® Truck Tire Limited Warranty.

TREAD DEPTH MEASUREMENTS AND WEAR BARS

Tires should be periodically measured for wear. This measurement should be taken in several spots across the tread, and around the circumference. If there is a variance in tread grooves greater than 2/32" across the face of the tire, consult a Michelin tire dealer for a professional inspection.

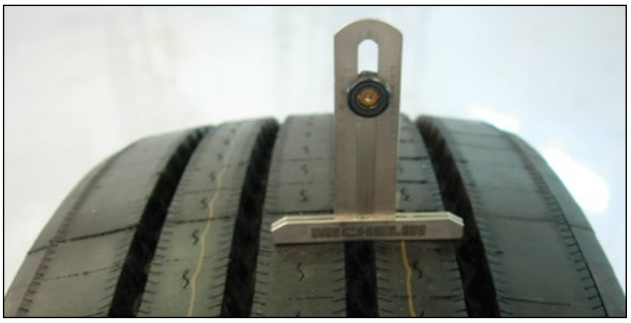

MICHELIN® tires contain "wear bars" in the tread grooves of the tire tread, which show up when there is only 2/32" remaining of tread rubber. When the tread is worn level with the wear bar indicator, the tire must be removed from service. Federal law requires that, "any tire on the front wheels of a bus, truck or truck tractor shall have a tread groove pattern depth of at least 4/32 of an inch when measured at any point on a major tread groove. The measurements shall not be made where tie bars, humps or fillets are located".

Tires mounted in dual must be matched so that the maximum difference between the diameters of the tires does not exceed 1/4" diameter, or a circumferential difference of 3/4". For tires of the same bead diameter and size, the maximum allowable difference in tread depth is 4/32". When there is a difference in tread wear, fit the least worn tire in the outside wheel position. Failure to properly match dual tires will result in the tire with the larger diameter carrying a disproportionate share of the load. Mismatched duals can lead to rapid tire wear, uneven tread wear, and possible casing failure.

DUAL SPACING

Sufficient space must be maintained between dual tires to allow airflow and to prevent the tires from rubbing against one another. To make sure dual spacing is correct, simply measure from the outside edge of the outer tire to the outside edge of the inner tire of the dual assembly, and cross reference this measurement to the "minimum dual spacing" found on the tire data page. For additional assistance, consult a Michelin tire dealer.

DIRECTIONAL TIRES

MICHELIN® X® LINE™ ENERGY Z Steer Tire

Several MICHELIN® tires feature directional tread designs to increase tread life and to reduce irregular wear. Directional tires have arrows molded into the shoulder/edge of the outer tread rib to indicate the intended direction of rotation. To maximize tire performance, directional tires should be mounted correctly on wheels to ensure that the directionality is respected when mounted on the recreational vehicle.

Once directional tires are worn greater than 50% of the original tread depth, there is generally no negative effect of running them in a direction opposite to the indicated direction of rotation.

Operating new directional tires in the opposite direction of that indicated on the tire will result in a premature onset of irregular wear, an increase in tire noise levels, and a significant reduction in tread life.

TIRE PRESSURE MONITORING SYSTEMS (TPMS)

There are several manufacturers of Tire Pressure Monitoring Systems (TPMS) available for recreational vehicle usage. TPMS systems monitor internal tire pressure levels during vehicle operation; some also provide the actual internal tire temperature readings. Maintaining proper tire inflation will help maximize tire life and fuel efficiency, and may result in a reduction in irregular tire wear and tire costs. If your recreational vehicle is fitted with a TPMS system, consult your Original Equipment manufacturer or recreational vehicle dealer for specific service guidelines. While TPMS systems give an early warning of low inflation pressure, they should not be considered as a replacement for manual tire inspections.

NITROGEN

The earth's atmosphere is approximately 78% nitrogen, along with 21% oxygen, and 1% other gases. Nitrogen is a dry inert gas that does not retain moisture. While there are advantages for aircraft and large off-the-road earthmover tires to use 100% nitrogen systems, it is generally difficult to quantify the advantages for over-the-road highway operations. The predominant concern for proper tire inflation is moisture in the compressed air system. Moisture, when present in the tire, greatly accelerates the oxidation effects to the tire and the wheel. Using well maintained inflation equipment (compressor, inflation lines, and in-line air dryer) will minimize the moisture content of the compressed air in the tire. Increasing the nitrogen percentage to 100% with a nitrogen inflation system will not adversely affect the inner liner of the tires, nor impact tire performance. Regular tire pressure maintenance remains critical, and tire inflation check intervals should not be extended due to nitrogen use.

WORKMANSHIP AND MATERIALS

MICHELIN® truck tires bearing the Michelin name and complete serial or identification numbers, used in consumer service such as on a recreational vehicle, are covered by a limited warranty against defects in workmanship and materials for the life of the original tread or five years from the date of purchase, whichever occurs first. At that time, all warranties, expressed or implied, expire. Please visit www.michelinrvtires.com under "Reference Materials" for complete details about the MICHELIN® Truck Tire Warranty, and to complete the MICHELIN® Tire Registration. For tires that were fitted new on an Original Equipment vehicles (i.e. acquired by the consumer on a new recreational vehicle), for warranty purposes, the purchase date of the brand new recreational vehicle serves as the date of tire purchase.

LOCATION OF TIRE IDENTIFICATION CODE

The Department of Transportation (DOT) requires that all tires produced for U.S. highways have a Tire Identification Number (TIN) imprinted on the tire. This unique identifier is referred to as the DOT code and is found on the lower sidewall of the tire. The DOT code begins with the letters "DOT"; the last four digits indicate the week and the year of manufacture. In the example below, the DOT code ending with "0316" indicates a tire made in the 3rd week (Jan) of 2016.

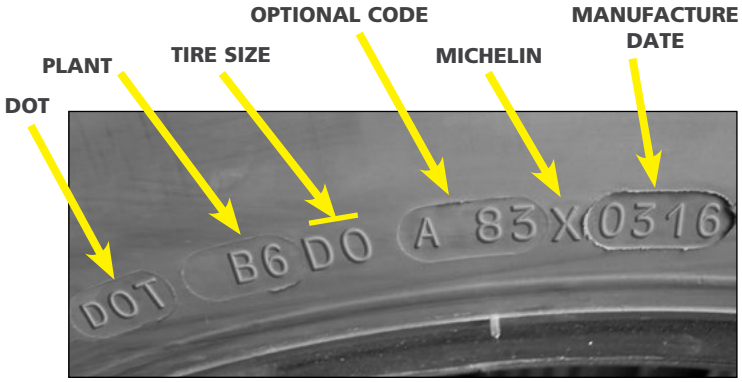

SERVICE LIFE FOR RECREATIONAL VEHICLE TIRES

MICHELIN® tires are designed to meet the highest criteria for quality, performance, and durability. In addition to natural rubber, MICHELIN® tires contain more than 200 different raw materials to provide superior strength and flexibility throughout the life of the tire. Over time, these components naturally evolve; the evolution depends upon many factors such as the environment, storage conditions, and conditions of use (load, speed, inflation pressure, and maintenance). Therefore, it is impossible to predict when tires should be replaced based on their calendar age alone.

Some recreational vehicle owners may choose to operate MICHELIN® tires after the tire warranty expires. For consumers who choose to operate tires beyond the tire's warranted life, Michelin recommends frequent tire inspections, especially before long trips. Michelin recommends that any tires, including spare tires, should be replaced after 10 years of service, even if they have not reached the legal wear limit.

In addition to frequent tire inspections and proper inflation pressure maintenance, Michelin recommends regular tire inspections by trained tire technicians. Consumers are strongly encouraged to be aware not only of their tire visual conditions and inflation pressures, but also of any changes in dynamic performances which could be an indication that the tires need to be removed from service. Indications include an increased level of noise or vibration, or an increased frequency in loss of inflation pressure (faster than 2 psi per month). For additional assistance, consult a Michelin tire dealer.

SELECTING ALTERNATIVE TIRE SIZES

Original Equipment manufacturers carefully select the proper tire and wheel for optimum performance and handling. When replacing tires on a recreational vehicle, follow the information found on the vehicle placard. Michelin recommends maintaining the original tire size recommended on the placard, as changing to a different size may impact the overall vehicle performance. Consult your recreational vehicle dealer or a Michelin tire dealer before changing tire sizes.

DRIVE AT PROPER SPEEDS

⚠WARNING

Do not drive at speeds faster than the speed ratings for your tires. Never exceed legal speed limits or speeds reasonable for the driving conditions.

High speed driving can be dangerous and may damage your tires. The maximum continuous speed at which MICHELIN® tires can be operated is indicated in the following data pages. Exceeding this maximum speed will cause the tire to build up excessive heat that can result in sudden tire destruction, property damage, and personal injury. When driving at highway speeds, correct inflation pressure is especially important. Michelin does not endorse exceeding legal speed limits.

LONG TERM STORAGE

When a tire is fitted to a wheel and put under load, but it is not regularly used, the tire does not have an opportunity to "exercise" and will prematurely age.

If a recreational vehicle is not driven regularly, care must be taken to preserve the remaining life of the tires. Best practices include:

1. Store the recreational vehicle in a cool, dry, sealed garage, away from electric generators or transformers. Do not store in an area where welding is performed, or in a garage that has frequently used electric motors.
2. Place a barrier between the tire and the storage surface. Suitable barriers include plastic, plywood, cardboard, or rubber floor mats.
3. Before storing the vehicles, thoroughly clean tires with soap and water.
4. If outdoors, cover tires to block direct sunlight and ultraviolet rays.
5. Inflate tires to the maximum inflation pressure indicated on the sidewall.
6. If long term storage exceeds 3 months, consider taking the recreational vehicle for monthly highway drives (about one hour of operational time). Driving the vehicle will give the tires an opportunity to

generate internal heat which will promote long life.

Before removing the vehicle from long term storage, thoroughly inspect each tire, and restore all tires to the proper inflation pressure.

AGING, WEATHER CHECKING, AND OZONE CRACKING

During tire inspections, check the sidewalls for signs of aging, referred to as weather checking or ozone cracking. Aging appears as tiny cracks in the rubber surface of the sidewall. If the cracks are less than 2/32" deep, the tire is acceptable to keep in operation; when the cracks extend deeper than 2/32", the tire should be inspected by a Michelin tire dealer and possibly replaced.

To promote long life and prevent premature tire aging:

1. Keep tires properly inflated and rotated.
2. Keep tires clean, avoiding petroleum products,

alcohol, and silicone.

4. Avoid prolonged exposure to high heat, extreme cold, and ultraviolet rays.
5. Cover the tires when the vehicle is not in use.
6. Follow the recommendations for long term storage (Page 117).

PROPER CLEANING OF RV TIRES

Proper cleaning of tires is important to obtain the maximum years of service. Road oil will cause deterioration of rubber, and dirt buildup will hold contaminants next to the tire. A soft brush and mild car wash soap is the best way to clean tires.

If a dressing product is used on a sidewall, use extra care and caution. Tire dressings that contain petroleum products, alcohol, or silicones may cause premature aging and sidewall cracking.

In many cases, it is not the dressing product itself that can be a problem, but rather, the chemical reaction that the product can have with the antioxidant waxes found in the tire. Heat can add to this negative reaction. When these same dressing products are applied to a passenger car tire that is replaced every three or four years, it is rare to see a problem. However, since Recreational Vehicle tires usually last much longer, there is more time for a chemical reaction to occur.

TIRE ROTATION, BALANCE, ALIGNMENT AND TIRE WEAR

When tires are properly mounted and maintained with the correct inflation pressure, they should wear in a smooth even wear pattern. To maximize tire wear, Michelin recommends the following best practices.

1. **Tire Rotation.** MICHELIN® tires should be rotated when necessary. If the tires are wearing evenly, there is no need to rotate. If tires begin to show an irregular wear pattern, or if the wear rate on the tires from axle to axle or side to side is perceptively different, the tires should be rotated. There is no restriction on criss-cross rotation; however, if the vehicle is equipped with a spare tire/wheel is should be included into the rotation pattern. If using directional tires, and if the tires are less than 50% worn, ensure tires are mounted to rotate in the proper direction. Once a directional tire has worn more than 50% of its tread, it is acceptable to rotate into any position.
   Considerations about tire rotations include:
   - The load carried by a particular tire in a particular wheel position varies. The inside tire in a dual position carries more load than the outside tire on the same axle.
   - Curbing damage and weather checking often occurs on the outside sidewall of the outside tire.
   - Tires in dual should not differ more than 1/4" diameter (4/32" tread wear). When there is a difference in tread wear, fit the least worn tire in the outside wheel position.
   - When there is irregular wear, rotate the tires so they turn in the opposite direction.
2. **Tire Balance and Runout.** Check with your recreational vehicle dealer for tire balance recommendations. It is customary to check tire and wheel assembly balance and runout if there is a ride complaint.

   If there is a ride disturbance, validate that tire inflation pressures are properly adjusted. If inflation pressures are correct, consult your recreational vehicle dealer or a Michelin tire dealer for assistance.

   In order to identify the source of the ride disturbance, consider the following factors to assist the servicing dealer:
   - Road conditions when the vibration occurs.
   - Vehicle speed and engine rpms when the vibration occurs.
   - Where the vibration seems to be coming from (front or rear of the vehicle).
   - Frequency of the vibration (Does it phase in/out, or is it constant?).

3. **Alignment.** The purpose of alignment is to minimize tire wear and to maximize predictable vehicle handling and driver control. Toe misalignment is the number one cause of steer tire irregular wear. In order to optimize tire wear, consider the following:
   - Tires that are not operated at a normal (perpendicular) angle to the road surface typically produce uneven tire wear. Tires that are aimed in contrasting directions (because of conflicting alignment angles) produce unfavorable and irregular tire wear.
   - Tires that are used on highly compliant suspensions will likely produce irregular tire wear.
   - Alignments should be conducted in the most representative loading condition of the recreational vehicle, to include cargo load, fuel, and water.
   - Check with your recreational vehicle dealer for specific alignment specifications.

Toe Wear. A feathered wear pattern on the front tires typically indicates misalignment (toe-in or toe-out). Sometimes, a radial tire will not have this wear pattern unless the toe condition is severe. Instead of the feathered edge wear, the tire will be worn on the inside or outside shoulder, which could be confused with camber wear.

On a three axle recreational vehicle, a skewed rear axle and/or tag axle could cause feathered edge wear on one shoulder of one front tire, and feather edge wear on the opposite shoulder of the other front tire. In order to correctly diagnose a tire wear condition, the recreational vehicle should have an all-wheel alignment.

Toe Wear

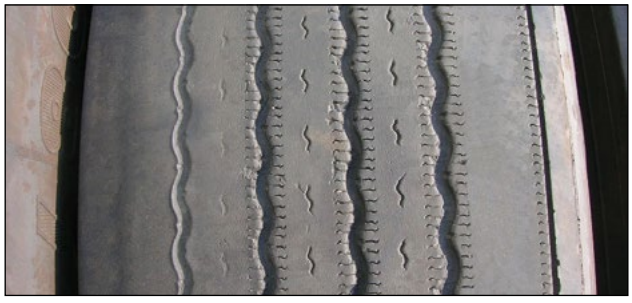

Toe Wear

Camber Wear. Also known as edge wear, camber wear appears on the inside or outside shoulders of the tread. Wear on the inside edge of both tires may be due to negative camber or toe-out misalignment. If only one tire shows edge wear, check for worn kingpin bushings, bent or worn steering components, or excessive positive camber. For solid beam axles, excessive camber can result from axle over-load.

Camber Wear

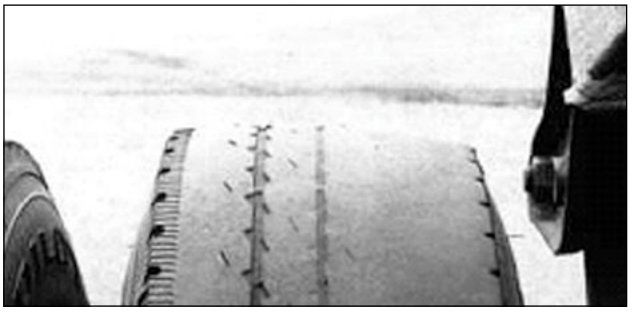

Camber Wear

COMMON TIRE DAMAGES

No tire is indestructible. Certain conditions of use and abuse can stress a tire beyond its operating limits, causing it to be prematurely removed from service. Below are 4 tire damages observed on recreational vehicles. This list is not all inclusive; for additional information, consult your Michelin tire dealer.

1. **Underinflation.** Underinflation is often referred to as a "run-flat" tire and is caused by operating a tire at very low or zero pressure. A tire is considered to be flat when it has operated at less than 80% of the recommended inflation pressure. When a tire is underinflated for the load it is carrying, the sidewall flexes too much and it builds up heat. The tire is unable to effectively dissipate the heat, and the heat damages the inner liner, the casing, and the outer sidewall of the tire. When a tire is operated underinflated, the tire casing is irreversibly damaged.

   If a tire has been operated underinflated, there will be physical signs of damage. The inner liner will show signs of marbling or creasing. The sidewall may show signs of creasing or flexing damage. In some cases, if an extremely underinflated tire is operated at highway speeds, the tire may unseat itself and it will be

destroyed as the wheel rolls on the uninflated sidewall.

When one tire in a dual configuration comes out of service due to underinflation, the other tire in the dual configuration should be inspected immediately. If the unserviceable tire was underinflated, the serviceable dual tire was carrying more of the load for that wheel position. As a result, the properly inflated tire may have suffered casing damage. When performing tire service on MICHELIN® truck tires with steel casings, follow industry safety guidelines. Always use tire safety cages during the inflation process.

EFFECT: Inner Liner Marbling - Creasing
CAUSE: Underinflation

2. Fatigue Rupture. Fatigue Rupture damage is sometimes called a "zipper" because of the zipper-like effect it creates in the steel casing cords of the damaged tire. When casing cables are repeatedly bent due to overload and/or underinflation, they are damaged and will eventually break. Since all of the tire cables are exposed to the same amount of stress, many will rupture at the same time. This severe rupture is extremely dangerous and can happen unexpectedly: hours, days or even months after the initial overload happened. Whenever performing tire service on MICHELIN® truck tires with steel casings, follow industry safety guidelines. Always use tire safety cages during the inflation process.

Fatigue Rupture or "Zipper"

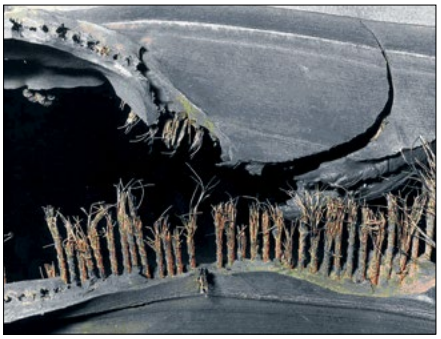

EFFECT:
Any Damage That Will Allow the Casing to Oxidize

CAUSE:
Moisture

⚠WARNING

Re-inflation of any type of tire and wheel assembly that has been operated in a run-flat or underinflated condition (80% or less of recommended operating pressure) can result in serious injury or death. The tire may be damaged on the inside and can explode during inflation. The wheel may be worn, damaged, or dislodged and can explosively separate.

3. Dual Kissing. Dual Kissing damage occurs when two tires in dual configuration make contact with each other while in operation. The heat generated by the friction between the two tires severely weakens the casing material of both tires. The condition may be caused by incorrect wheel width, incorrect wheel offset, or underinflation.

EFFECT: Friction Severely Weakens the Casing
CAUSE: Dual Kissing

4. Dynamometer Damage. Dynamometer type damage occurs in the crown area of tires when operated on dynamometers for extended periods of time. If a service provider does not adhere to recommended guidelines pertaining to the maximum time and permitted speed for dynamometer testing, irreversible tire damage may later appear on the tread surface. For additional information about the maximum time and permitted speeds, consult your Michelin tire dealer.

EFFECT:
Internal Deterioration of the Tread Rubber

CAUSE:
Prolonged Use of Dynamometer

HOW TO WEIGH THE RECREATIONAL VEHICLE

NOTE: Michelin recommends using a professional weighing group or organization to perform the weighing of your Motorhome/RV. The Recreational Vehicle Safety Foundation (RVSEF) is an organization that performs weighing and other educational services. They can be contacted at www.rvsafety.com. If you are planning to do your own weighing, you should follow the procedures below. Michelin recommends checking with the scale operator to make sure there are no concerns on damage to the scale or to the vehicle if weighing side to side to determine individual wheel position weights.

HOW TO WEIGH THE RV

First, the RV must be weighed fully loaded — that includes passengers, food, clothing, fuel, water, propane, supplies, and anything else you can think of. Also, any towed vehicle (car, boat, or trailer) or item loaded on brackets on the back of the RV (like bikes or motorcycles) should be included in the weighing.

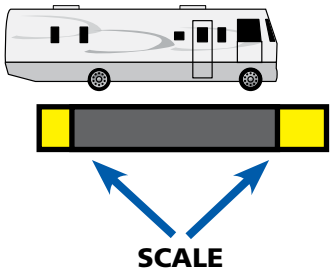

THREE DIFFERENT TYPES OF SCALES:

1) Platform – Platform scales are usually long enough to weigh the entire vehicle at once. Michelin suggests the following:

a) Pull onto the scale so that only the front axle is on the platform. The rear end of the scale needs to be midway between the front and rear axles. Record the weight.
b) Pull forward until the full unit is on the scale. Record the weight.
c) Pull forward until only the rear axle is on the platform. The front end of the scale needs to be midway between the front and rear axles. Record the weight.
d) If the RV has a rear tag axle, pull forward so only tag axle is on the scale. Record the weight.
e) To determine individual wheel position weights, repeat steps (a) through (d) with only one side of the vehicle actually on the scale and the vehicle centered over the side of the scale. See diagram on next page. Record the weights.
f) To calculate the opposite wheel positions' weights, subtract the weights recorded in step (e) from the weights recorded in steps (a) through (d). If there is not a towed vehicle, the tag axle weight derived from (d) will represent the actual weight on the tag axle.
g) If a vehicle is being towed, it should be weighed and combined with the GVW (Gross Vehicle Weight) to ensure the total weight doesn't exceed the GCWR (Gross Combined Weight Rating).

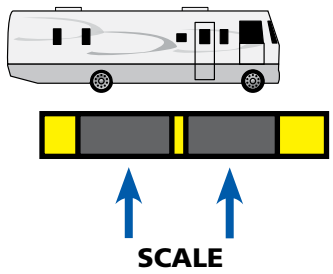

2) Segmented Platform – Platform scales with segmented sections can provide individual axle weights and total vehicle weights all at once when the vehicle is positioned properly. To do this, simply:

a) Position the vehicle on the scales so that each axle is centered as much as possible on the segments, and record the weight.
b) Reposition the vehicle so that only one side is on the scale – centered on the segment as much as possible.
c) Subtract the weighed wheel positions from the total axle weights to determine the unweighed wheel position weights.

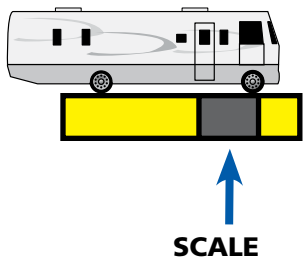

3) Single Axle – Weighs one axle at a time. Follow these steps:

a) Drive the front axle onto the scale and stop long enough for the weight to be recorded.
b) Pull vehicle forward until the rear axle is on the scale.
c) For gross vehicle weight, add the two axle weights together.
d) To obtain the individual wheel position weights, repeat this process with only one side of the RV on the scale.

Note: Even though the weight of the total axle is within the axle rating, it may be overloaded on one side, which means an overloaded wheel position. That's why side-to-side weighing is required.

The RV must remain as level as possible on the scale (even when an axle or side isn't on the scale). Therefore, to obtain side-to-side weights, there must be enough space on either side of the scale to accommodate the RV being partially off the scale.

If there is a difference in the weights on one side of the vehicle as compared to the other, it is important to redistribute the load more evenly to avoid component failure and improve handling. These weights make it possible to compare against the GAWR (Gross Axle Weight Rating), GVWR (Gross Vehicle Weight Rating), and tire capacities. They also help determine proper tire pressure.

WEIGHING THE SINGLE AXLE RECREATIONAL VEHICLE

TO OBTAIN INDIVIDUAL AXLE AND GROSS VEHICLE WEIGHTS

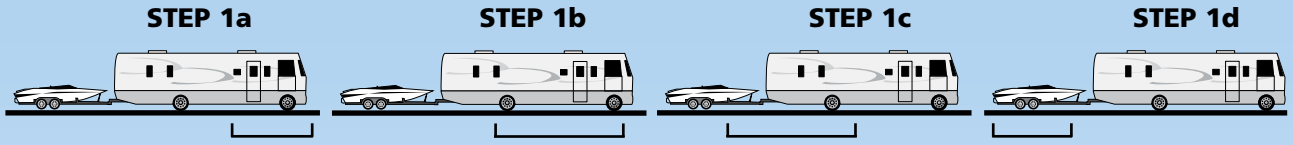

	STEP 1a	STEP 1b	STEP 1c	STEP 1d
Scale Weight	_____ lbs. (Step 1a = Gross Axle Weight)	_____ lbs. (Step 1b = Gross Vehicle Weight)	_____ lbs. (Step 1c = Gross Axle Weight)	_____ lbs. (Step 1d)
From Owner's Manual	_____ lbs. Gross Axle Weight Rating	_____ lbs. Gross Vehicle Weight Rating	_____ lbs. Gross Axle Weight Rating	_____ lbs. Vehicle Weight (Gross Combined Weight Rating – Gross Vehicle Weight)

TO OBTAIN INDIVIDUAL WHEEL POSITION WEIGHTS

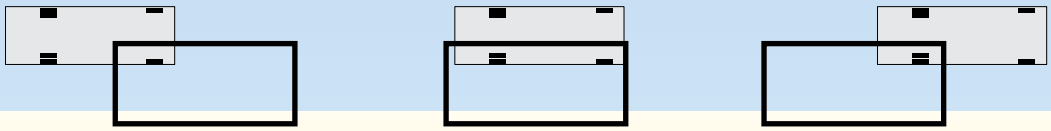

	STEP 2a	STEP 2b	STEP 2c
One Side Scale Weight	_____ lbs. (Step 2a)	_____ lbs. (Step 2b)	_____ lbs. (Step 2c)
Calculate Other Side Weight	_____ lbs. (Step 1a-2a)	_____ lbs. (Step 1b-2b)	_____ lbs. (Step 1c-2c)
Tire Load (lbs.)	_____ lbs. (See Note #1)	_____ lbs.	_____ lbs. (See Notes #1 & #2)
Inflation	_____ psi (See Note #1)		_____ psi (See Note #1)

NOTES:
1. From the tire manufacturer's load and inflation tables or the sidewall of the tires mounted on the vehicle.
2. If vehicle has duals, read dual capacity from tire and multiply by 2 to obtain dual assembly load capacity.

WEIGHING THE TANDEM AXLE RECREATIONAL VEHICLE

TO OBTAIN INDIVIDUAL AXLE AND GROSS VEHICLE WEIGHTS

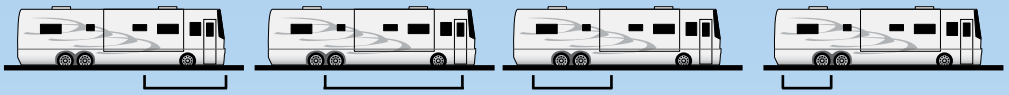

	STEP 1a	STEP 1b	STEP 1c	STEP 1d	STEP 1e (calculated)
Scale Weight	_____ lbs. (Step 1a = Gross Axle Weight)	_____ lbs. (Step 1b = Gross Vehicle Weight)	_____ lbs. (Step 1c)	_____ lbs. (Step 1d = Gross Axle Weight)	_____ lbs. Drive Axle Weight = (1c-1d)
From Owner's Manual	_____ lbs. Gross Axle Weight Rating	_____ lbs. Gross Vehicle Weight Rating		_____ lbs. Gross Axle Weight Rating	_____ lbs. Gross Axle Weight Rating

TO OBTAIN INDIVIDUAL WHEEL POSITION WEIGHTS

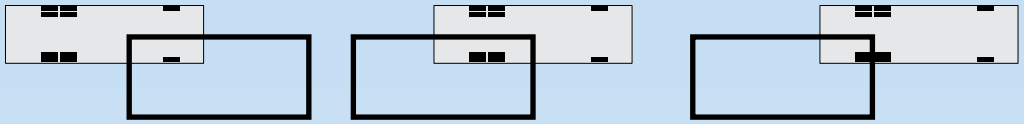

	STEP 2a	STEP 2b	STEP 2c	STEP 2d (calculated)
One Side Scale Weight	_____ lbs. (Step 2a)	_____ lbs. (Step 2b)	_____ lbs. (Step 2c)	_____ lbs. Step 2d: Right Duals = (2b-2c)
Calculate Other Side Weight	_____ lbs. (Step 1a-2a)	_____ lbs. (Step 1c-2b)	_____ lbs. (Step 1d-2c)	_____ lbs. Left Duals = (2d)
Tire Load (lbs.)	_____ lbs. (See Note #1)		_____ lbs. (See Note #1)	_____ lbs. (See Notes #1 & #2)
Inflation	_____ psi (See Note #1)		_____ psi (See Note #1)	_____ psi (See Note #1)

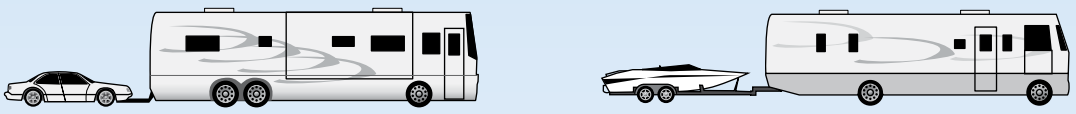

NOTES:
1. From the tire manufacturer's load and inflation tables or the sidewall of the tires mounted on the vehicle.
2. If vehicle has duals, read dual capacity from tire and multiply by 2 to obtain dual assembly load capacity.

THE EFFECT OF TOWED VEHICLES OR TRAILERS

If your RV is towing a vehicle, you need to know the RV's GCWR (Gross Combined Weight Rating), the total actual loaded weight of the RV, plus the total actual loaded weight of the towed vehicle. Even though the GCWR has more to do with the design limits of the drivetrain (engine, transmission, axle, brakes, and bearings), the additional weight can also affect the tires and the RV's handling. Also, always remember to consider the tongue weight of the trailer and its effect on handling.

HOW TO USE THE ACTUAL RV WEIGHT INFORMATION WITH THE TIRE DATA LOAD CHART

Let's consider an RV running on 275/80R22.5 MICHELIN® X® LINE ENERGY Z LRG tires, with actual corner weights of 5,400 lbs. on the left front tire, 5,175 lbs. on the right front tire, 8,500 lbs. on the left rear duals, and 9,200 lbs. on the right rear duals. For control of the RV, it is critical that the tire pressures be the same across an axle. Therefore, we must "overinflate" the right front tire and the left rear duals. Checking the load/inflation table below shows that a cold tire pressure of 95 psi will support 5,510 lbs. on a single front tire.

To determine the pressure for the rear duals, again take the heaviest position, in this instance the right rear weighs 9,200 lbs. The load/inflation table below shows that a cold pressure of 85 psi will support 9,380 lbs. on 2 dual tires. It is important to note that the cold inflation pressure for the tire must never exceed the maximum inflation rating that is stamped on the wheel.

NOTICE

REMEMBER: For control of the recreational vehicle, it is critical that the tire inflation pressures are set to the same inflation pressure across an axle.

To find the proper inflation pressure, refer to the load and inflation charts in the MICHELIN® RV Tires (MWL43146) or visit www.michelinrvtires.com. These charts have been altered for RV usage only.

S = 1 tire on 1 side of single axle Single Axle	[---------]
D = 2 tires on 1 side of dual axle Dual Axle	[[---------]]
For Tag axle, use applicable Single or Dual chart	

LOAD AND INFLATION TABLE

This chart is for RV wheel end use only.

275/80R22.5 LRG – MICHELIN® X® LINE ENERGY Z

PSI		70	75	80	85	90	95	100	105	110
kPa		480	520	550	590	620	660	690	720	760
LBS	S	4500	4725	4940	5155	5370	5510	5780	5980	6175
	D	8190	8600	9080	9380	9770	10140	10520	10880	11350
KG	S	2040	2140	2240	2340	2440	2500	2620	2710	2800
	D	3720	3900	4120	4260	4440	4600	4780	4940	5150

MAXIMUM LOAD AND PRESSURE ON SIDEWALL	
S	6175 LBS at 110 PSI
D	5675 LBS at 110 PSI
S	2800 KG at 760 kPa
D	2575 KG at 760 kPa

USING BLOCKS TO LEVEL MOTORHOMES AND RVS EQUIPPED WITH RADIAL TIRES

⚠WARNING

Assure that tires are properly supported during storage to avoid structural damage to the tire.

When using blocks to level motorhomes or RVs, extreme caution must be taken to make sure the tires are fully supported. The weight on the tire should be evenly distributed on the block. And in the case of duals, it should be evenly distributed on blocks for both tires. If not, the sidewall cables can become fatigued and damaged, resulting in a sidewall rupture and a complete, sudden loss of pressure.

Note in the correct method, the blocks are wider than the tread and longer than the tire's footprint. This provides maximum support to the tires and assures that the load is evenly distributed.

CORRECT – Evenly supporting the full load.

INCORRECT – One tire or only a portion of one tire is supporting the full load.

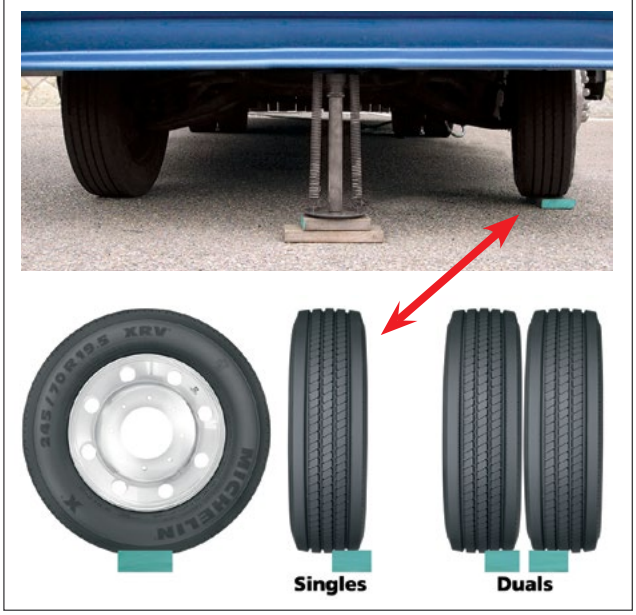

SECTION SEVEN

Repairs and Retread

Section Seven

Repairs and Retread 125-130

REPAIRS **126-130**

Two-Piece Radial Truck Nail Hole Repair Method Instructions

MICHELIN® X One® Tires Nail Hole Repair Method Instructions

Blue Identification Triangle

RETREAD **124**

REPAIRS

TWO-PIECE RADIAL TRUCK TIRE NAIL HOLE REPAIR METHOD INSTRUCTIONS

Please follow the instructions closely so you can put your customer back on the road with a quality tire repair!

⚠WARNING

Do not return to service or drive on an improperly repaired tire.

Please follow the exact step-by-step procedures contained in this manual to attain a safe and quality repair. Only qualified and trained personnel should do tire repairs. Proper inspection prior to repair requires the tire to be removed from the wheel to fully assess internal and external damage. The goal is to return the repaired tire to service and provide the customer with a sound and safe product.

Repair products and materials used should be from the same manufacturer to ensure compatibility in the curing process.

Check the tire for signs of underinflation/run-flat and other damages such as bulges, bead damage, bad repairs, anything that would require the tire to be inspected by a professional retread and repair facility.

Never inflate a tire that has signs of heat damage or with indications of running underinflated.

Remember, if there are any concerns or questions regarding the safety and integrity of the tire, err on the side of caution, and forward the tire to a professional retread and repair facility.

Always follow correct procedures when demounting and mounting tires and wheels.

When inflating an assembly after a repair, be sure to follow all procedures outlined by the tire and wheel industry.

Inspect sidewall area for any signs of 'zipper' damage, such as bulges, and listen for popping sounds. If any of these are present, deflate the tire immediately by disconnecting the inflation line at the quick connect, deflate completely, then remove from the cage/restraining device, and scrap the tire.

Safety First

Use safety glasses, and keep repair area, tools, and materials clean and in good working order.

NOTE: Always place the mounted tire in a safety cage or an OSHA*-approved restraining device with the valve core still removed!

* Occupational Safety and Health Administration

Nail Hole Limitations Chart

Maximum repairable nail hole diameter is 3/8 inch (T-T area).

All injuries larger than 3/8 inch or outside the specified T-T area, must be treated as a section repair.

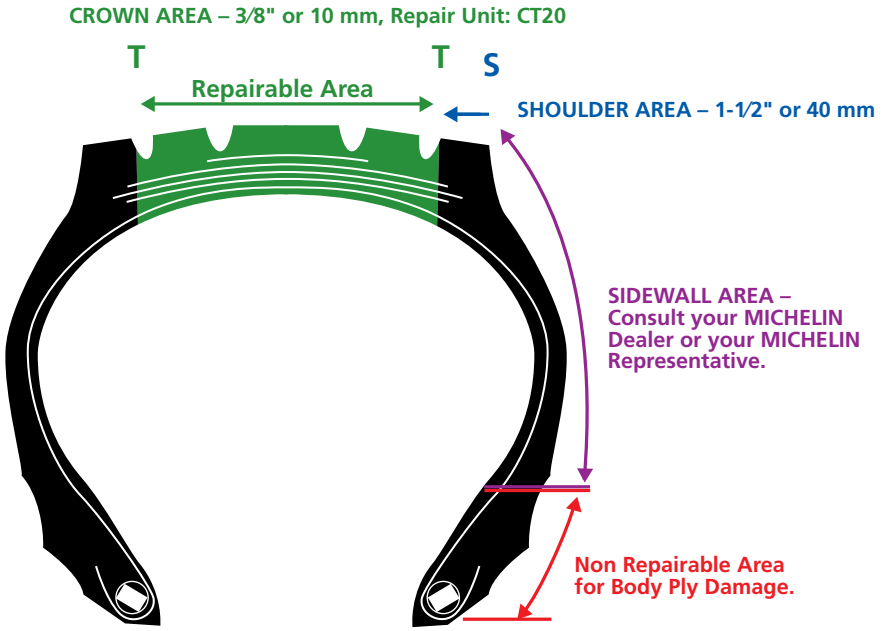

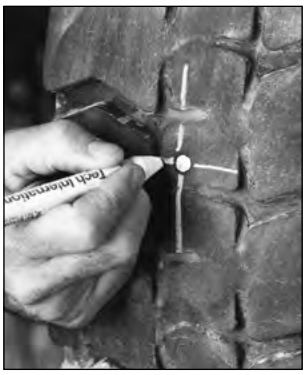

1 Locate and mark the injury on the outside and inside of the tire.

2 REMOVE the object from the tire. Inspect the injury to determine the location, size, and angle of penetration. Probe into the injury and make sure that no air infiltration exists or excessive rust has formed. Refer to the Nail Hole Limitations Chart on Page126 to determine repairability and to select the proper repair material. Use Injury Sizing Tool if available. Make sure to measure the injury to assure the damage does not exceed 3/8" (10 mm).

3 Apply rubber cleaner to the inner liner at the injured area. While the area is still moist, use a rubber scraper to remove contaminating substances.

4 Prepare the injury with the proper size carbide cutter on a low rpm drill (max. 1200 rpm). Following the direction of the injury, drill from the inside out. Repeat this process three times. Repeat this procedure from the outside of the tire to ensure damaged steel and rubber are removed (be careful when drilling; you do not want to make the injury any larger than necessary).

5 Using a Spiral Cement Tool, cement the injury from the inside of the tire with Chemical Vulcanizing Fluid. Turn the tool in a clockwise direction both into and out of the tire. This step should be repeated 3 to 5 times. Leave the tool in the injury as you go to the next step.

6 Place the wire puller in the middle of the black exposed portion of the stem. Remove the protective poly from the stem and brush a light coat of Chemical Vulcanizing Fluid (cement) on this area. For lubrication, apply a coat of cement to the wire puller where it contacts the stem.

7 Remove spiral cement tool from the injury and feed the small end of the wire puller through the injury from inside of the tire.

8 Grasp the wire puller from the outside of the tire and begin pulling the stem into place. If the wire puller comes off, grasp the stem with a pair of pliers and pull the stem until it fills the injury, exposing approximately 1/2 inch (13 mm) of the gray cushion bonding gum above the face of the tread.

9 On the inside of the tire, center the appropriate repair unit template over the stem, make sure to correctly align the template in relationship to the tire beads, and draw a perimeter around the template.

10 Remove the template and cut off the stem 1/8 inch (3 mm) above the inner liner on the inside of the tire. NOTE: If you do not have a repair template, go to this step and cut the stem; then using the correct sized patch and centering it correctly on the injury – arrows towards the beads – draw your perimeter approximately 1/2 inch larger than the repair patch.

11 Use a low rpm (max. 5000 rpm) buffer and texturizing wheel to mechanically buff the stem flush to the inner liner. Then buff the outlined area to achieve an even RMA-1 or RMA-2 buffed texture. Use a clean, soft wire brush, remove all dust and debris from the buffed area.

12 Vacuum all buffing dust and debris from the tire. If the buffed surface is touched or contaminated after cleaning the area, you must repeat Step 11 to guarantee your surface is clean for proper repair bonding.

13 Using Chemical Vulcanizing Fluid (cement), brush a thin, even coat into the clean textured area. Allow 3 to 5 minutes to dry; the vulcanizing cement should be tacky. Areas with high humidity may require a longer dry time. Make sure the cement used is compatible with the repair units you are installing.

14 With the tire beads in a relaxed position, center the repair unit over the filled injury. Press the repair unit down into place over the injury. Make sure the directional bead arrows on the repair unit are aligned with the beads of the tire, and press into place. Roll the protective poly back to the outer edges of the repair unit. This enables you to handle the repair unit without contaminating the bonding gum layer. You are now ready to stitch the repair.

15 Stitch the repair unit, firmly pressing down from the center toward the outer edges. This will eliminate trapping air under the repair unit.

16 Remove the rest of the poly backing. Stitch the repair unit from the center to the outer edges. Remove the top clear protective poly.

17 To cover over-buffed areas in tubeless tires, apply Security Sealer to the outer edge of the repair unit and over-buffed area. If tube-type, cover the repair with Tire Talc to prevent the repair from vulcanizing to the tube.

18 Cut the stem off on the outside of the tire 1/8 inch (3 mm) above the tire's surface. The tire is now ready to be returned to service.

MICHELIN® X ONE® TIRES NAIL HOLE REPAIR METHOD INSTRUCTIONS

MICHELIN® X One® Tire

- MICHELIN® X One® tires: There are no special repair techniques or materials required when repairing a MICHELIN® X One® tire.

Contact your local Michelin Representative or MRT[1] Dealer if damage is beyond nail hole limits and requires a section repair.

BLUE IDENTIFICATION TRIANGLE

Tech Identification Triangles (IDTs): Tech International has designed a blue identification triangle for placement adjacent to a sidewall repair for easier identification of acceptable bulges related to such a repair and not related to tire separation. Bulges 3/8" or less beyond the normal sidewall profile that are associated with sidewall repairs of radial truck tires are permitted by the U.S. Tire Manufacturers Association (USTMA) and have been deemed acceptable by the Commercial Vehicle Safety Alliance (CVSA). The Tech IDT is a triangular blue equilateral patch measuring 1.25" per side that is located and vulcanized just above the tire rim's flange area and near the repair.

Acceptable Bulges 3/8" or Less

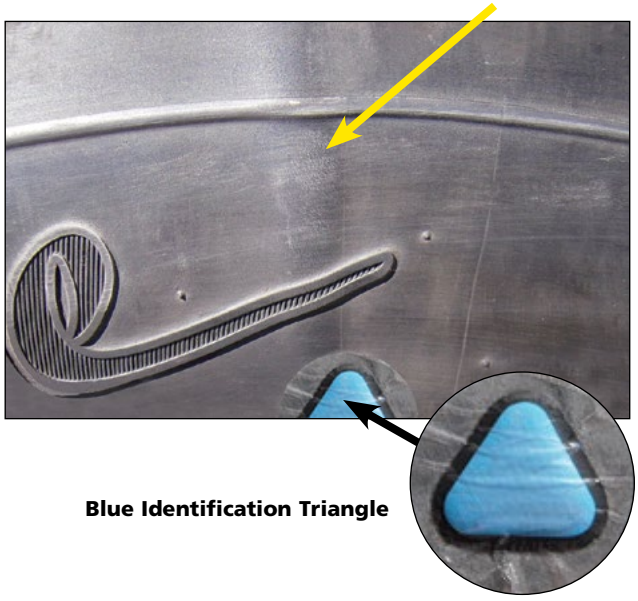

Blue Identification Triangle

RETREAD

Since MICHELIN® radial tires are manufactured to very precise tolerances, it is necessary for similar standards of accuracy to be maintained during the retreading process. Suitably designed modern equipment for radial tires must be provided in the retread shop. The proper tread designs, tread width, tread compound, and tread depths, must be selected according to the type of tire and its anticipated service.

The tire must be processed with precision to maintain the design characteristics of the MICHELIN® radial. As there is very little margin for error when retreading radial tires, perfection should be the only standard acceptable.

Refer to the MICHELIN® X One® Retread and Repair on Pages 102-104 for recommendations on retread guidelines.

Michelin Retread Technologies (MRT) Retread Designs are also available in MRT[1] Retread Quick Reference Tread Guide (MYL44115) and/or the MICHELIN® Truck Tire Data Book (MWL40731).[2]

For more information, contact your local Michelin Representative or MRT Dealer.

(1) MRT - Michelin Retread Technologies
(2) Documents subject to change.

SECTION EIGHT

Diagonal (Bias or Cross) Ply and Tube-Type

Section Eight

Diagonal (Bias Or Cross) Ply and Tube-Type 131-142

THE DIAGONAL (BIAS OR CROSS) PLY 132-134

- Definitions
- Tube-Type Tire
- Truck Tire Size Markings
- Repair and Retread
- Static and Low Speed Load and Pressure Coefficients
- TRA (The Tire and Rim Association, Inc.) Standards

GENERAL INSTRUCTIONS FOR TUBE-TYPE TIRE DEMOUNTING/MOUNTING 135-137

- Selection of Proper Components and Materials
- Tire and Wheel Lubrication
- Preparation of Wheels and Tires
- Storage

MOUNTING TUBE-TYPE TIRES 138-140

- Mounting Tube-Type Tires Using Manual Spreaders
- Mounting Tube-Type Tires Using Automatic Spreaders
- Inflation of Tube-Type Tires

DEMOUNTING TUBE-TYPE TIRES 141-142

THE DIAGONAL (BIAS OR CROSS) PLY TIRE

DEFINITIONS

Diagonal (bias or cross) ply (or conventional) tires are made up of a number of textile cords set on a bias (laid diagonally), criss-crossing one another. Depending on the textile strength of the cord used (rayon, nylon, polyester, and the required size of the tire, there could be from 6 to 20 plies in a bias-ply carcass. Without steel belts to stabilize the tread, the sidewall and tread work as one unit resulting in distortion with deflection during each revolution. This abrasive force creates scrub and generates heat, prematurely aging the components and shortening the life of the tire.

The number of cross-plies in a tire tends to stiffen its walls, preventing sufficient flex under heavy load. This causes lateral tread movement that impairs road grip and causes tread abrasion. The heat generated also stretches the textile cords during the carcass life, allowing the casing to grow and making it difficult to match new, used, and retreaded tires in dual configuration.

Aspect Ratio example: 10.00-20 (dash (-) designates the diagonal (bias or cross) construction), aspect ratio = 100. Section height is the same as section width.

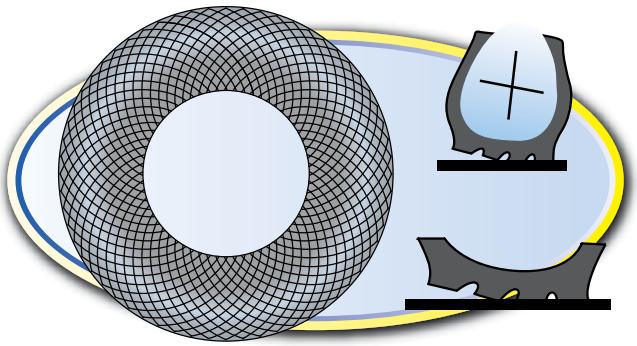

TUBE-TYPE TIRE

Tube Code: The proper MICHELIN® tube to be used with MICHELIN® tube-type tires is designated by the nominal rim diameter followed by a code. Example: Tube for 10.00R20 Michelin is 20N (the R designates radial construction).

MICHELIN® tubes are made of butyl rubber and marked with the trade name "AIRSTOP®". Because of the extreme flexibility of the MICHELIN® tire, it is recommended to use an "AIRSTOP" tube. These tubes are made with an overlap splice that is stronger than the butt splice used in many other tubes. Some MICHELIN® tube-type tires may be run with or without a tube. Contact Michelin to determine tires that apply. Ensure tire is mounted on a sealed wheel if mounted tubeless.

Flap Code: When a flap is required, the proper size to use with MICHELIN® tires on each particular rim is designated by a code, the last two digits of which are the rim diameter or rim width. Unless otherwise specified, the flap for the preferred rim is normally supplied with the tire. (e.g. 200-20L or 20 x 7.50)

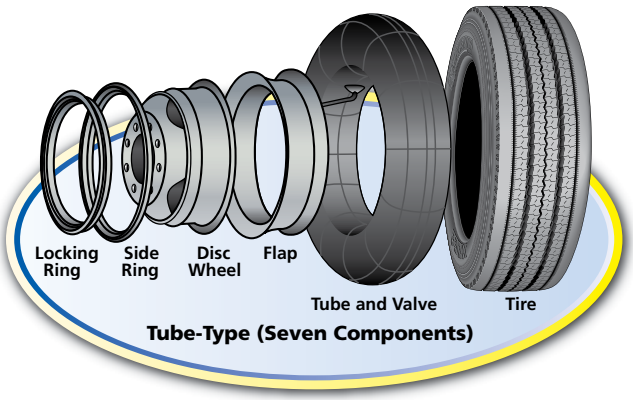

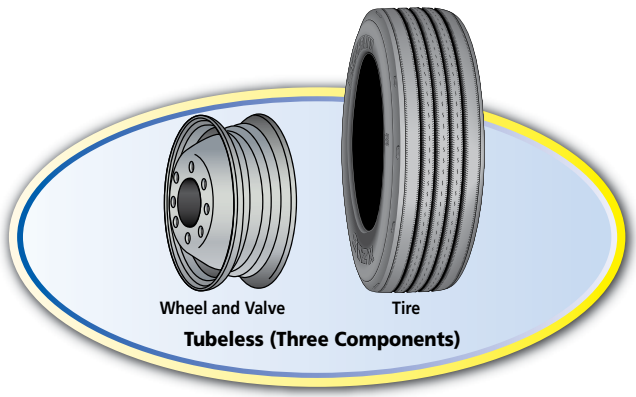

TRUCK TIRE SIZE MARKINGS

Most truck tire sizes are indicated by the section width in inches, followed by R for radial (dash (-) designates the diagonal (bias or cross) construction), followed by the wheel diameter in inches:

TUBE-TYPE

10.00R20

10.00 = nominal section width in inches

R = radial

20 = wheel diameter in inches

TUBELESS

11R22.5

11 = nominal section width in inches

R = radial

22.5 = wheel diameter in inches

COMPARATIVE SIZES – STANDARD – LOW PROFILE			
TUBE-TYPE	TUBELESS TYPE	MICHELIN	TRA*
8.25R15	9R17.5		
8.25R20	9R22.5	235/80R22.5	245/75R22.5
9.00R20	10R22.5	255/80R22.5	265/75R22.5
10.00R20	11R22.5	275/80R22.5	295/75R22.5
11.00R20	12R22.5		
10.00R22	11R24.5	275/80R24.5	285/75R24.5
11.00R22	12R24.5		

* The Tire and Rim Association, Inc.

Note: A "rule-of-thumb" formula for finding equivalent tubeless sizes from tube-type: Take the nominal section width and remove all figures after the decimal point. Round up to next whole nominal section number and add 2.5 to wheel diameter.

Example:

	TUBE-TYPE		TUBELESS
	8.25R20	=	9R22.5
Nominal Cross Section	8.25		
Remove	0.25		
Add	1 to the 8	=	9
Wheel Diameter	20		
Add 2.5 to Wheel Diameter	20 + 2.5	=	22.5

Thus we have 9R22.5 Tubeless.

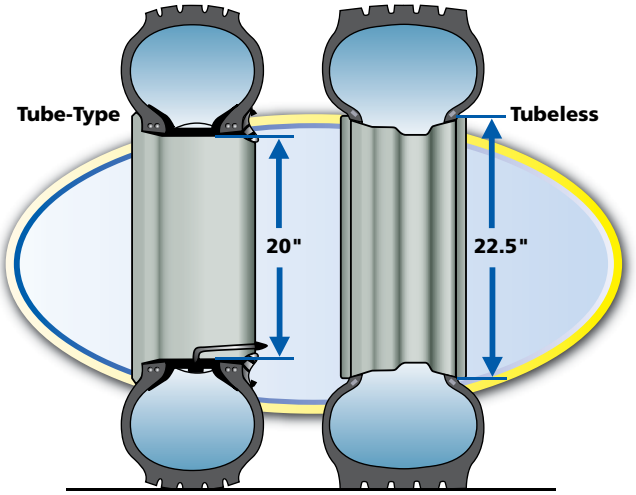

REPAIR AND RETREAD

1. Follow proper procedures per your Michelin Retread Technologies dealer.
2. Use bias repair units in bias tires and radial repair units in radial tires.
3. When performing tube repairs, do not install the patch on an inflated tube, and apply a tire talc to the patch and buffed area to prevent sticking to the inside of the tire.

STATIC AND LOW SPEED LOAD AND PRESSURE COEFFICIENTS

⚠WARNING

Never exceed the maximum load or pressure limits of the wheel. Exceeding the wheel limits can lead to component failure, serious accident, injury or death.

TRA (THE TIRE AND RIM ASSOCIATION, INC.) STANDARDS

These Tables apply to tires only. Consult wheel manufacturer for wheel load and inflation capacities.

Load limits at various speeds for radial ply truck-bus tires used on improved surfaces. (1)

A. METRIC AND WIDE BASE TIRES

The service load and minimum (cold) inflation must comply with the following limitations unless a speed restriction is indicated on the tire.*

Speed Range (mph)	% Load Change	Inflation Pressure Change
11 thru 20	+17%	+15 psi
6 thru 10	+25%	+20 psi
2.6 thru 5	+45%	+20 psi
Creep thru 2.5	+55%	+20 psi
Creep (2)	+75%	+30 psi
Stationary	+105%	+30 psi

B. CONVENTIONAL TIRES

The service load and minimum (cold) inflation must comply with the following limitations unless a speed restriction is indicated on the tire.*

Speed Range (mph)	% Load Change	Inflation Pressure Change
11 thru 20	+32%	+15 psi
6 thru 10 (2)	+60%	+30 psi
2.6 thru 5 (2)	+85%	+30 psi
Creep thru 2.5 (2)	+115%	+30 psi
Creep (2,3)	+140%	+40 psi
Stationary (2)	+185%	+40 psi

Note: For bias ply tires please consult the TRA Year Book.

(1) These load and inflation changes are only required when exceeding the tire manufacturer's rated speed for the tire.
(2) Apply these increases to Dual Loads and Inflation Pressures.
(3) Creep – Motion for not over 200 feet in a 30-minute period.

Note 1: The inflation pressures shown in the referenced tables are minimum cold pressures for the various loads listed.
Higher pressures should be used as follows:
A. When required by the above speed/load table.
B. When higher pressures are desirable to obtain improved operating performance.
For speeds above 20 mph, the combined increases of A and B should not exceed 20 psi above the inflation specified for the maximum load of the tire.

Note 2: Load limits at various speeds for:
Tires used in highway service at restricted speed.
Mining and logging tires used in intermittent highway service

***Exceeding the legal speed limit is neither recommended nor endorsed.**

GENERAL INSTRUCTIONS FOR TUBE-TYPE DEMOUNTING / MOUNTING

A tire cannot perform properly unless it is mounted properly on the correct size wheel. The following are general instructions for demounting and mounting MICHELIN® tube-type tires. For detailed instructions on mounting and demounting truck tires on particular types of wheels, refer to the instructions of the wheel manufacturer or the USTMA (U.S. Tire Manufacturers Association) wall charts.

⚠WARNING

Do not reinflate any tires that have been run underinflated or flat without careful inspection for damage. If run-flat damage is detected, scrap the tire. A tire is considered run-flat if it is found to be less than 80% of normal recommended operating pressure. This can result in serious injury or death. The tire may be damaged on the inside and can explode during inflation. The wheel parts may be worn, damaged, or dislodged and can explosively separate.

TUBES AND FLAPS FOR COMMERCIAL TRUCK TIRES				
SIZE	TUBE	TUBE MSPN	FLAP	FLAP MSPN
7.50R15	15/16J	*73993	15x6.00	62152
8.25R15	15/16J	*73993	15x6.00	62152
10.00R15	15P	04560	15x7.50	58753
9.00R16	16N	17786	16x6.00D	94605
7.50R17	17K	26362	17X6.00D	45608
335/80R20	20P	06934	20x10.00	47501
275/80R20	20P	06934	20x10.00	47501
365/80R20	20Q	39144	20x10.00	47501
15.5/80R20	20S	32420	20x10.00	47501
14.00R20	20S	32420	20x10.00	47501
14.5R20	20S	32420	20x10.00	47501
395/85R20	20S	32420	20x10.00	47501
365/85R20	20S	32420	20x10.00	47501
16.00R20	20V	32961	20x10.00	47501
10.00R20	20N	17078	20x7.50	44274
11.00R20	20P	06934	20x8.50	49781
12.00R20	20Q	39144	20x8.50	49781
12.00R24	24Q	11708	24/25x8.50	48842

* Use tube MSPN 73993 for CAT Forklifts (15/16J with valve 1221), other truck / industrial applications, use MSPN 17542 (15/16J with valve 570). MSPN 17542 uses same flap and is the same price as MSPN 73993.

MOUNTING LUBRICANT		
Product	Size	Product code
Tigre grease	4 Kg	25817

1. SELECTION OF PROPER COMPONENTS AND MATERIALS

a. **All tires must be mounted with the proper MICHELIN® tube and flap (if required) and wheel** as indicated in the specification tables on Page 135. For complete tire specifications, refer to application specific data books.

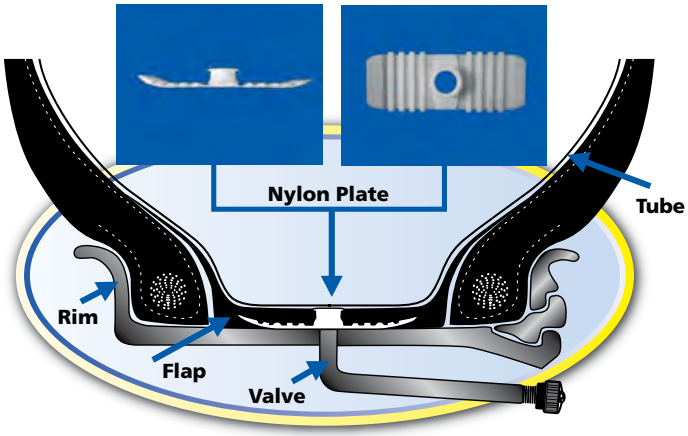

b. **Make certain that wheel components are properly matched and of the correct dimensions for the tire.**

c. **Always fit a new MICHELIN® tube in a new mounting.** Since a tube will exhibit growth in size through normal use, an old tube used in a new mounting increases the possibility of tube creasing and chafing, possibly resulting in failure.

Pinched tube

d. **Always install a new flap in a new mounting.** A flap, through extended use, becomes hard and brittle. After a limited time, it will develop a set to match the tire and wheel in which it is fitted. Therefore, it will not exactly match a new tire and wheel combination.

e. **Always install new valve cores and metal valve caps containing plastic or rubber seals.** For tires requiring O-rings, be sure to properly install a new silicone O-ring at every tire change.

f. **Always use a safety device such as an inflation cage** or other restraining device that will constrain all wheel components during an explosive separation of a multi-piece wheel, or during the sudden release of the contained air of a single piece wheel that is in compliance with OSHA (Occupational Safety and Health Administration) standards.

⚠WARNING

It is imperative to follow all of the following inflation safety recommendations. Failure to do so will negate the safety benefit of using an inflation cage or other restraining device and can lead to serious injury or death.

2. INFLATION SAFETY RECOMMENDATIONS

a. Do not bolt the inflation cage to the floor or nor add any other restraints or accessories.

b. The inflation cage should be placed at least 3 feet from anything, including a wall.

c. Never stand over, or in front of a tire when inflating.

d. Always use a clip-on chuck and a sufficiently long air hose between the in-line gauge and the chuck to allow the service technician to stand outside the trajectory zone when inflating.

Clip-on Chuck

Trajectory zone means any potential path or route that a wheel component may travel during an explosive separation or the sudden release of the tire pressure, or an area at which the blast from a single piece wheel may be released. The trajectory may deviate from paths that are perpendicular to the assembled position of the wheel at the time of separation or explosion. See Rubber Manufacturers Association Tire Information Service Bulletin Volume 33, Number 4 for more information.

Note: Safety cages, portable and/or permanent, are also available for inflation of the MICHELIN® X One® tire assemblies.

3. TIRE AND WHEEL LUBRICATION

It is essential that an approved tire mounting lubricant be used. Preferred materials for use as bead lubricants are vegetable based and mixed with proper water ratios per manufacturer's instructions. Never use antifreeze, silicones, or petroleum-base lubricants as this will damage the rubber. Lubricants not mixed to the manufacturer's specifications may have a harmful effect on the tire and wheel.

The lubricant serves the following three purposes:

- Helps minimize the possibility of damage to the tire beads from the mounting tools.
- Helps ease the insertion of the tire onto the wheel by lubricating all contacting surfaces.
- Assists proper bead seating (tire and wheel centering) and helps to prevent eccentric mountings.

The MICHELIN® product, Tigre Grease 80, MSPN 25817, is specifically formulated for commercial truck tire mounting. It can be obtained through any authorized Michelin Truck Tire dealer or by contacting Michelin Consumer Care (1-888-622-2306).

Apply a clean lubricant to all portions of the tire bead area and the exposed portion of the flap using sufficient but sparing quantities of lubricant. **Also, lubricate the entire rim surface of the wheel. Avoid using excessive amounts of lubricant, which can become trapped between the tire and tube and can result in tube damage and rapid tire pressure loss.**

CAUTION: It is important that tire lubricant be clean and free of dirt, sand, metal shavings, or other hard particles. The following practice is recommended:

a. Use a fresh supply of tire lubricant each day, drawing from a clean supply source and placing the lubricant in a clean portable container.
b. Provide a cover for the portable container and/or other means to prevent contamination of the lubricant when not in use. For lubricants in solution, we suggest the following method, which has proven to be successful in helping to minimize contamination and prevent excess lubricant from entering the tire casing: provide a special cover for the portable container that has a funnel-like device attached. The small opening of the funnel should be sized so that when a swab is inserted through the opening into the reserve of lubricant and then withdrawn, the swab is compressed, removing excess lubricant. This allows the cover to be left in place providing added protection. A mesh false bottom in the container is a further protection against contaminants. The tire should be mounted and inflated promptly before lubricant dries.

4. PREPARATION OF WHEELS AND TIRES

a. Always wear safety goggles or face shields when buffing or grinding wheels.
b. Inspect wheel assemblies for cracks, distortion, and deformation of flanges. Using a file and/or emery cloth, smooth all burrs, welds, dents, etc. that are present on the tire side of the wheel. Inspect the condition of bolt holes on the wheels. Rim flange gauges and ball tapes are available for measuring wear and circumference of aluminum wheels.
c. Remove rust with a wire brush and apply a rust inhibiting paint on steel wheels. The maximum paint thickness is 0.0035" (3.5 mils) on the disc face of the wheel.
d. Remove any accumulation of rubber or grease stuck to the tire, being careful not to damage it. Wipe the beads down with a dry rag.

NOTICE **Avoid using excessive amounts of lubricants.**

NOTICE **Dry mounting should be avoided. Use approved lubricants.**

⚠WARNING

Never weld or apply heat to a wheel on which a tire is mounted. This may lead to a destructive increase in air pressure, tire failure, injury or death.

STORAGE

Serious problems can occur with tube-type tires when they are mounted with water trapped between the tire and tube. Under pressurization, the liquid can pass through the inner liner and into the casing plies. This can result in casing deterioration and sudden tire failure. Most failures of this nature are due to improper storage. This is a particular problem with tube-type tires because of the difficulty in detecting the water, which has collected between the tire and tube.

MOUNTING TUBE-TYPE TIRE

⚠WARNING

Reassembly and inflation of mismatched parts can result in serious injury or death. Just because parts fit together does not mean that they belong together. Check for proper matching of all wheel parts before putting any parts together. Inspect the tire and the wheel for any damage that would require them to be placed out of service.

Mismatching tire and wheel components is dangerous. A mismatched tire and wheel assembly may explode and can result in serious injury or death. This warning applies to any combination of mismatched components and wheel combinations. Never assemble a tire and wheel unless you have positively identified and correctly matched the parts.

1 Insert the proper size MICHELIN® tube into the tire and partially inflate (3 psi) to round out the tube (with larger sizes it may be necessary to use bead spreaders – see below for mounting instructions).

2 Insert the valve through the flap valve hole. (Make sure the reinforced patch that is directly over the flap valve hole is facing outwards.) Then insert the remainder of the flap into the tire.

3 Check the flap wings to ensure against folding. This is easily accomplished by placing your hand into one tire side, then the other, and then running your hand along the entire flap wing.

4 Inflate the tube until the flap is secured against the tire wall and the beads start to spread apart, making sure **not to exceed 3 psi.**

5 Apply a proper tire lubricant to both beads, exposed flap, and fully to the rim. Make sure that excess lubricant does not run down into the tire.

6 Lay the rim flat on the floor with the gutter side up. Place tire, tube, and flap on the rim, taking care to center the valve in the slot.

7 Three piece wheels positioned.

Two-Piece Wheels

For two-piece wheels, place the side ring on the rim base so that the ring split is opposite the valve stem by placing the leading end (end without the notch) of the ring into the groove in the rim, and progressively walk the side ring into place. Ensure the ring is fully seated in the gutter.

Three-Piece Wheels

For three-piece wheels, place the side ring on the rim base and stand on the ring to position it below the gutter wheel base. Snap the leading end (end without the notch) of the lock ring into the gutter of the rim base, and progressively walk the lock ring into place. Ensure the ring is fully seated in the gutter.

8 Snap and walk ring into place.

MOUNTING OF TUBE-TYPE TIRES USING MANUAL SPREADERS

1. Follow Steps 1 through 3 of the "Mounting of Tube-Type Tires." However, before inserting the flap into the tire, position two bead spreaders in the following manner:
   a. Place the first at a 90° angle to the valve. (Flap is positioned between the spreader and the tube.)
   b. Place the second directly opposite the first.
   c. Spread the beads and insert the flap.
   d. Close the beads, remove spreaders.
2. Follow Steps 4 through 8 of the "Mounting of Tube-Type Tires."

MOUNTING OF TUBE-TYPE TIRES USING AUTOMATIC SPREADERS

1. Spread the tire beads.
2. Inflate the tube to approximately 3 psi.
3. Insert the tube into the tire.
4. Insert the valve through the flap valve hole. (As mentioned, the flap reinforced valve area must face outwards.) Insert the remainder of the flap into the tire.
5. Close the beads.
6. Apply a proper tire lubricant to the inside and outside surfaces of both beads and to that portion of the flap that appears between the beads. **Make sure that excess lubricant does not run down into the tire.**
7. Follow Steps 4 through 8 of the "Mounting of Tube-Type Tires."

⚠WARNING

Do not reinflate any tires that have been run underinflated or flat without careful inspection for damage. Unseen internal damage may lead to failure, injury or death.

If run-flat damage is detected, scrap the tire. A tire is considered run-flat if it is found to be less than 80% of normal recommended operating pressure.

INFLATION OF TUBE-TYPE TIRES

1. An inflation line with an extension (30" minimum), in-line gauge, and a clip-on valve chuck should be used for inflation. Remove valve core and lay the assembly flat on the ground. Using an approved restraining device, inflate partially to seat beads to no more than 3 psi. While the tire is still in the restraining device, make sure all wheel components are centered and locked properly. If not, the tire must be deflated, broken down, relubricated and reinflated. Do not attempt to seat the lock ring by means of a hammer.

2. Deflate the tire by removing the inflation line. This is to allow the tube to relax, thus, eliminating any wrinkles or uneven stretching that may have occurred during primary inflation.
3. **With the valve core still removed, place the dual and wheel assembly into an approved safety cage or other approved restraining device meeting OSHA (Occupational Safety and Health Administration) standards,** and reinflate the tire to the pressure shown on the sidewall in order to ensure proper bead seating. Then adjust the tire to the proper operating pressure. Never stand over a tire or in front of a tire when inflating. Always use a clip-on valve chuck with an in-line valve with a pressure gauge or a presettable regulator and a sufficient length of hose between the clip-on chuck and in-line valve (if one is used) to allow the employee to stand outside the trajectory path when inflating. USTMA (U.S. Tire Manufacturers Association) requires that all steel sidewall radial tires are inflated without a valve core.
4. Reinspect the assembly for proper positioning and seating of all components.
5. Check for leaks, and install a suitable valve cap.

DEMOUNTING TUBE-TYPE TIRES

⚠WARNING

Any inflated tire mounted on a wheel contains explosive energy. The use of damaged, mismatched, or improperly assembled tire and wheel parts can cause the assembly to burst apart with explosive force. If you are struck by an exploding tire, wheel part, or the blast, you can be seriously injured or killed. Do not attempt to dismount the tire while the assembly is still installed on the vehicle. Use proper tools to demount or mount wheel parts. Never use a steel hammer to seat wheel parts – use only rubber, plastic, or brass-tipped mallets. Striking a wheel assembly with a hammer of any type can damage the tire or wheel and endanger the installer. Use a steel duck bill hammer only as a wedge. Do not strike the head of a hammer with another hard-faced hammer – use a rubber mallet.

Rim Tools

1 Before loosening any nuts securing the tire and wheel assembly to the vehicle, remove the valve core and deflate completely. If working on a dual assembly, completely deflate both tires. Run a wire or pipe cleaner through the valve stem to ensure complete deflation. This is to prevent a possible accident.

2 Remove the tire and wheel assembly from the vehicle and place on the floor with the side ring up.

3 Run a wire or pipe cleaner through the valve stem to clear the valve stem.

4 Apply lubricant to all surfaces of the bead area of the tire. Use the duck bill hammer, with the rubber mallet as a wedge, or a slide hammer.

5 **For two-piece wheels**, remove the side ring by pushing the tire bead down. Insert the tapered end of the rim tool into the notch and pry the side ring out of the gutter. Pry progressively around the tire until the side ring is free of the gutter.

6 **For three-piece wheels**, remove the lock ring by pushing the side rings and the tire bead down. Insert the tapered end of the rim tool into the notch near the split in the lock ring, push the tool downward, and pry the lock ring outward to remove the gutter from the base. Use the hooked end of the rim tool progressively around the tire to complete the removal, then lift off the side ring.

7 Turn the assembly over.

8 Unseat the remaining tire bead from the rim, and lift the rim from the tire.

SECTION NINE

Tire Damage

EFFECT & CAUSE

All scrap tire failures are cause and effect related. In the majority of the situations, it is the effect that we first see when we look at the tire damage. However, tire condition "effects" may have many causes. Often a pattern can be found that may point to changes needed to avoid future scrap failures of this nature. The majority of tubeless commercial scrap conditions are found in the following damage categories:

Section Nine

Tire Damage 143-158

EFFECT AND CAUSES 143

TIRE INSPECTION 144-145

RUN-FLAT 146-147

AIR INFILTRATION 148-151

The Use of Internal Balancing Materials and/or Coolants in MICHELIN® Truck Tires

PINCH SHOCK 152

MINIMUM DUAL SPACING 152

IMPACT DAMAGE 153

FATIGUE RELATED DAMAGE 154

BEAD DAMAGE 155

ADDITIONAL CAUSES: REPAIRS AND RETREADING CONDITIONS 156-157

SCRAP INSPECTION FORM 158

TIRE INSPECTION

Any tire that is determined or suspected to be run-flat, should be inspected thoroughly prior to returning to service.

Tire inspection should always include a thorough inspection of both sidewalls and inner liner, as this may reveal any potential damage condition that would cause the tire to become scrap. Inner liner examination for creases, wrinkling, discoloration, or insufficient repairs, and exterior examination for signs of bumps or undulations, as well as broken cords, could be potential out of service causes.

Look for wrinkling, discoloration, cracking, and/or degradation of the inner liner. Any breach to the inner liner can result in the introduction of moisture to the casing and subsequent corrosion. If any signs of run-flat exist to the inner liner, the tire should be made unusable and scrapped.

Abrasion marks on the sidewall due to road contact and/or creases in the sidewall are another indicator of run-flat. Feel for soft spots in the sidewall flex area. Using an indirect light source helps identify sidewall irregularities by producing shadows at the ripples and bulges. Look for protruding wire filaments indicating broken sidewall cords.

All repair patches should be inspected for lifting, cracks, splits, and general condition.

Proper OSHA (Occupational Safety and Health Administration) regulations must be followed when putting any tire and wheel back in service. After the tire has been inflated to 20 psi in a safety cage, it should undergo another sidewall inspection for distortions, undulations, or popping noise indicating a breaking of the steel cords. If this is the case, immediately deflate the tire and scrap. If no damage is detected, continue to inflate to the maximum pressure marked on the sidewall. Inspect the sidewall from a distance looking for distortions and/or undulations, and listen for a popping noise. If none exist, then insert valve core and return tire to service after adjusting the pressure.

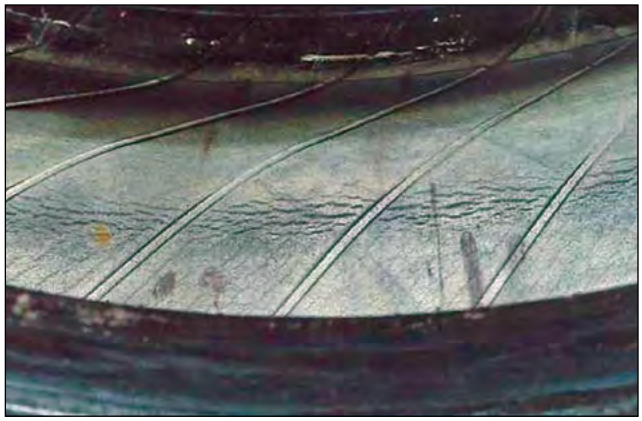

Potential Zipper Rupture

Inner Liner Damages

Abrasion Marks on the Sidewall

Ripples or Bulges in the Sidewall Flex Area

Patch Lifting

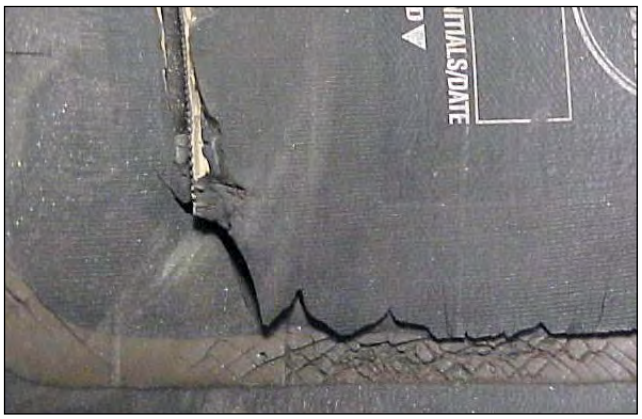

Patch Cracking

Remove and repair all penetrating objects and check the beads for damage that may have occurred during removal.

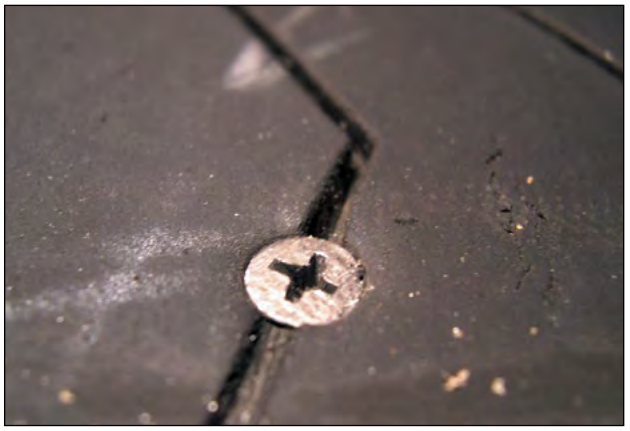

Penetrating Objects

Bead Damage Caused by Mounting/Dismounting

If none of these conditions exist, the U.S. Tire Manufacturers Association (USTMA) suggests the following procedure for returning the tire to service.

1. Place the tire and wheel assembly in an approved inflation safety cage*. Remain outside of the tire's trajectory. Do not place hands in the safety cage while inspecting the tire or place head close to the safety cage. After properly seating the beads, with the valve core removed, adjust the tire to 20 psi, using a clip-on air chuck with a pressure regulator and an extension hose.

2. Inspect the mounted tire inflated to 20 psi for distortions or undulations (ripples and/or bulges). Listen for popping sounds. **IF ANY OF THESE CONDITIONS ARE PRESENT, THE TIRE SHOULD BE MADE UNUSABLE AND SCRAPPED.** If none of these conditions are present, proceed to the next step.

3. With the valve core still removed, inflate the tire to 20 psi over the normal recommended operating pressure. During this step, if any of above conditions appear, **immediately stop inflation. DO NOT EXCEED MAXIMUM PRESSURE SPECIFICATION FOR THE WHEEL.**

4. Before removing the tire and wheel assembly from the safety cage, reduce the inflation pressure to the recommended normal operating pressure. Remain outside of the tire's trajectory zone.

* *Occupational Safety and Health Administration Standard 1910.177 requires all tubeless and tube-type medium and large truck tires be inflated using a restraining device or barrier (e.g., safety cage that conforms to OSHA standards), and using a clip-on chuck with a pressure regulator and an extension hose.*

RUN-FLAT AND ZIPPER RUPTURES

Run-flat: Any tire that is known or suspected to have run at less than 80% of normal recommended operating tire pressure.

Normal Operating Pressure: The cold inflation pressure required to support a given load as recommended by the tire manufacturer's data book.

Zipper Rupture: This condition is a circumferential rupture in the flex zone of the sidewall. This damage is associated with underinflation and/or overloading. Any moisture that is permitted to reach ply cords will cause corrosion, which can also result in a zipper rupture.

Occasionally, a tire will be flat when it arrives at the repair facility and there will be no external signs of a rupture. Note the X-ray photo below on the right reveals the broken casing ply cords.

If re-inflated, this tire will experience a rapid loss of tire pressure with explosive force.

⚠WARNING

Tires operated below the recommended tire pressure (run flat) are susceptible to zipper ruptures, particularly during the re-inflation process. Zipper ruptures pose a serious risk to personnel and must be well understood.

Circumferential Rupture of Casing Ply or "Zipper Rupture"

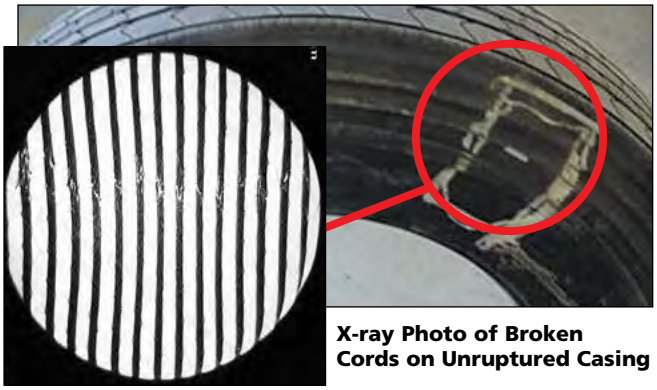

X-ray Photo of Broken Cords on Unruptured Casing

EFFECT: Inner Liner Marbling - Creasing
CAUSE: Underinflation

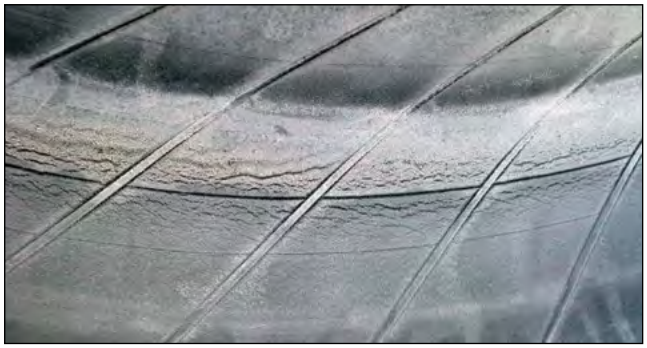

EFFECT: Inner Liner Cracking
CAUSE: Underinflation

EFFECT: Leaking Valve, Grommet, or Wheel
CAUSE: Improper Installation – Torque, Lubrication, Corrosion

EFFECT: Crack in the Repair Unit
CAUSE: Improper Repair or Improper Repair Procedures

EFFECT: Discoloration, Blistering, and/or Separations of the Inner Liner
CAUSE: Continued Operation After Loss of Tire Pressure

EFFECT: Sidewall Separation Due to Air Infiltration Resulting from Bead Damage
CAUSE: Due to Mount/Dismount

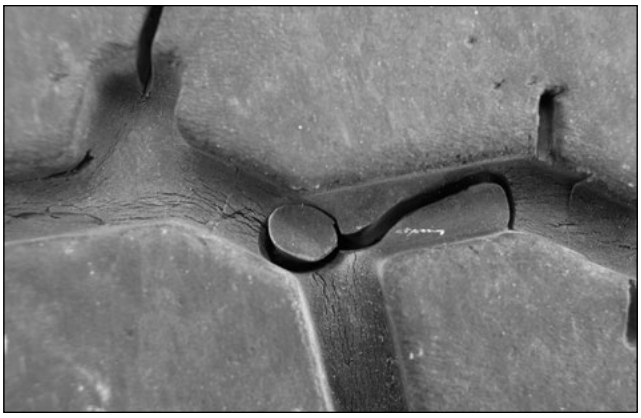

EFFECT: Crack Around Nail Hole Plug
CAUSE: Improper Repair or Improper Repair Procedures

EFFECT: Crown/Sidewall Injury Resulting in Tire Pressure Loss
CAUSE: Nail Hole Bolt/Debris Penetrating the Liner

EFFECT: Run-flat
CAUSE: Crown Perforation/Penetration

AIR INFILTRATION

Air infiltration is an "inside-out" damage. The air inside the tire is much higher (80-120 psi) than atmospheric pressure. Modern tubeless tires have a major advantage over a tube-type tire. When a tube-type tire is punctured, it only takes seconds to become flat. A tubeless tire may take weeks or months for the air to escape – this is because the inner-liner (airtight lining) is integral to the tire. One issue with tubeless tires is that even though they may take a long time to go flat, the air is still trying to get out. As the high pressure air makes its way back through the puncture channel, it can separate products within the tire.

The cause of air infiltration can be from:

- nail or other puncture
- objects left in the tire
- bad repair
- bead damage from mounting/dismounting
- anything that has caused the innerliner to become damaged

A dual tire can show this effect on the upper sidewall, bead area, or between crown belts. Nine times out of ten, though, it will be in the upper sidewall and manifest itself as a flap or "smiley face."

A more severe form of air infiltration on dual tires results in belt separation and subsequent rapid tire pressure loss.

Just as the MICHELIN® X One® tire reacts differently to pressure settings, it also reacts differently to air infiltration. The usual effect of air infiltration on an MICHELIN® X One® tire can be seen between the top or protector ply and the tread rubber. Air infiltration always results in removing the tire from service (dual or wide single); however, not having belt separation or large sidewall ruptures could prevent rapid tire pressure loss events.

AIR INFILTRATIONS ARE AVOIDABLE.

Never use a duckbill hammer to mount tubeless truck tires, as this is the number one cause of bead damages.

Use proper repair techniques, and inspect all repairs prior to returning tire to service.

NOTICE

Do not use hammers of any type. Striking a wheel assembly with a hammer can damage both the tire and the wheel and is a direct OSHA* violation.

* Occupational Safety and Health Administration

NOTICE

Any object that cuts the inner-liner can lead to air infiltration!

Remove and repair nails, screws, and other penetrations promptly, **BEFORE** they can cause air infiltration.

NEVER leave service items inside the tire like repair parts, valves, caps, etc. **NEVER** intentionally place items like golf balls inside the tire to "act" as a balancing agent, as this can lead to inner-liner damage.

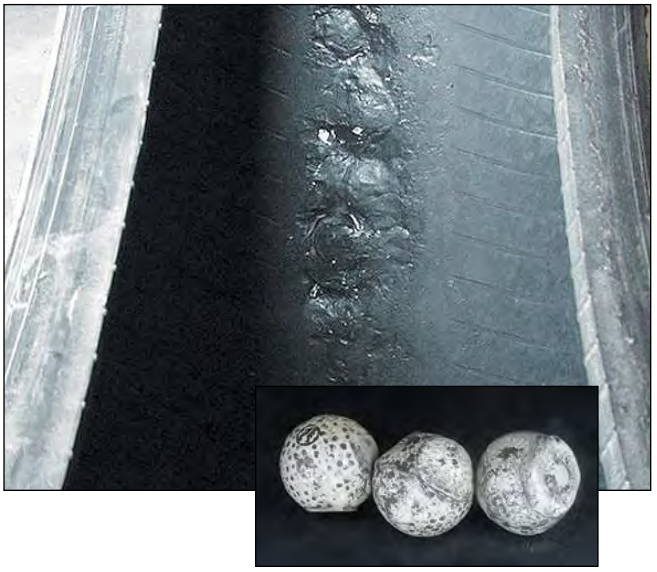

THE USE OF INTERNAL BALANCING MATERIALS AND/OR COOLANTS IN MICHELIN® TRUCK TIRES

The use of internal balancing materials and/or coolants (such as powders, liquids, gels and/or beads) in MICHELIN® Truck Tires does not automatically affect the tire warranty unless the internal balancing material and/ or coolant has a high water/moisture content or that it is determined that the internal balancing material and/or coolant has adversely affected the inner liner, casing plies, or the performance of the tires. Prior to using any type of internal balancing material and/ or coolant, Michelin strongly recommends that the customer make sure the internal balancing material and/ or coolant has been tested and certified by the internal balancing material and/ or coolant manufacturer as being safe for use in tires. Water/moisture content testing should be included in the certification process. Any product with a water or moisture content greater than 3% as measured by the Karl Fisher Method (ASTM D6304) will automatically void any mileage, number of retreads and/or time warranty.

In addition to the forgoing, please refer to the MICHELIN® Truck Tire Operator's Manual and Limited Warranty (MWE40021) for a general discussion of what is and is not covered by the warranty.

NOTE: Please consult Michelin prior to using internal balancing materials and/or coolants in any MICHELIN® tires that have sensors in them. The internal balancing materials and/or coolants may adversely affect the performance of the sensors.

Any damage that opens the inner liner and allows air under pressure to migrate within the steel and rubber products.

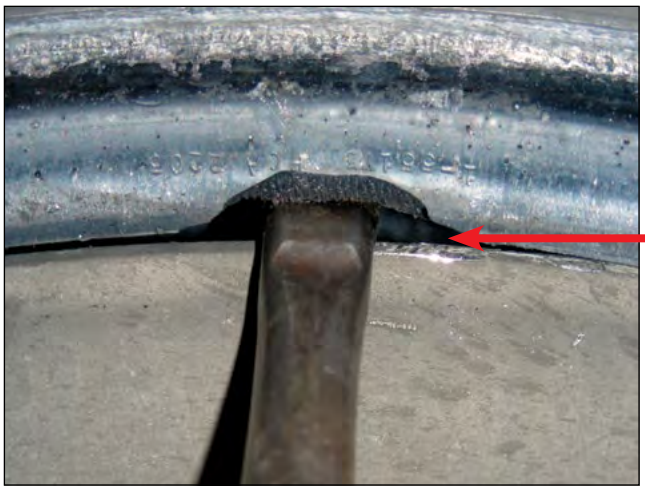

EFFECT: Bead Area or Inner Liner Damage
CAUSE: Improper Demounting Procedure, Lack of Lubricant

EFFECT: Premature Failure of Repair
CAUSE: Object that Penetrates Into the Tire and Through the Inner Liner

EFFECT: Object that Penetrates Into the Tire and Through the Inner Liner
CAUSE: Nail, Bolt, Screw, etc.

EFFECT: Radial Liner Split
CAUSE: Due to Impact

EFFECT: Missed Nail Hole
CAUSE: Repaired from the Outside Resulting in Missed Damage

EFFECT: Inner Liner Cut
CAUSE: Shipping or Mounting Damage

EFFECT: Inner Liner Burn
CAUSE: Electrical Discharge Damage

EFFECT: Sidewall Separation Due to Air Infiltration
CAUSE: Improper Repair

PINCH SHOCK

Crown/sidewall impact, crushing the tire and creating internal damage to the rubber products due to severe crushing.

- Impact with a curb, pothole, road debris, etc.
- Severe impact with any blunt object

EFFECT: External Rubber Damage
CAUSE: Severe Impact

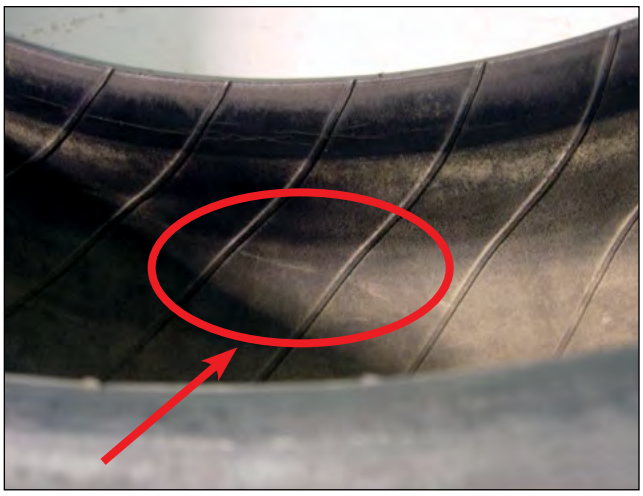

EFFECT: Internal Creasing
CAUSE: Severe Impact

EFFECT: Small Bulge
CAUSE Impact With a Curb, Pothole, Road Debris, etc.

Sidewall Rupture Shock

MINIMUM DUAL SPACING – KISSING DUALS

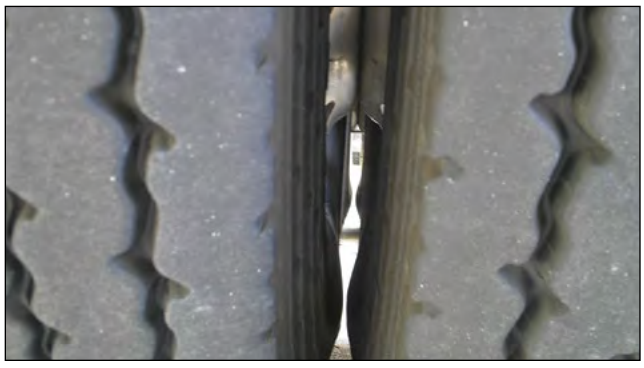

EFFECT: Friction Severely Weakens the Casing
CAUSE: Improper Minimum Dual Spacing

IMPACT DAMAGE

- With or without a rupture – zipper
- Crown, shoulder, or sidewall
- Impact with a sharp cutting object (A rupture usually indicates a rather severe impact.)

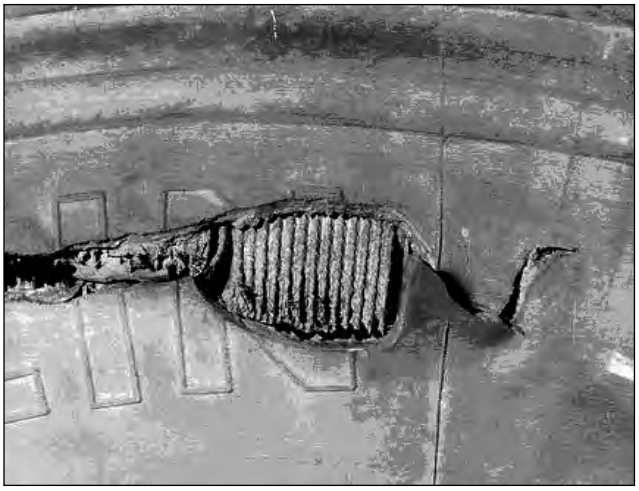

EFFECT: Break in Tire Interior Surface, Pulled or Loose Cords
CAUSE: Severe Impact With Any Blunt Object

EFFECT: Impact Damage
CAUSE: Severe Impact With Any Blunt Object

EFFECT: Sidewall Damage
CAUSE: Object Wedged Between Dual Assembly

EFFECT: Impact Damage
CAUSE: Sidewall Rupture from Shock

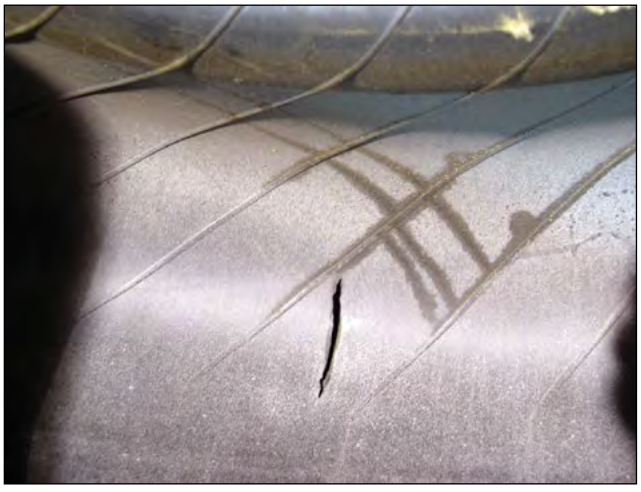

EFFECT: Inner Liner Split
CAUSE: Sidewall Impact

EFFECT: Impact Damage
CAUSE: Sidewall Rupture from Shock

FATIGUE RELATED DAMAGE

- With or without a rupture – zipper*
- Any damage that will allow the casing to oxidize or the casing plies to weaken or break
- Run-flat tires (mainly dual positions)
- Impacts to steel (not filled or repaired)
- Improper repair or improper repair procedures (premature failure of repair)

EFFECT: Exposed Steel Cord
CAUSE: Detachment of Repair Product

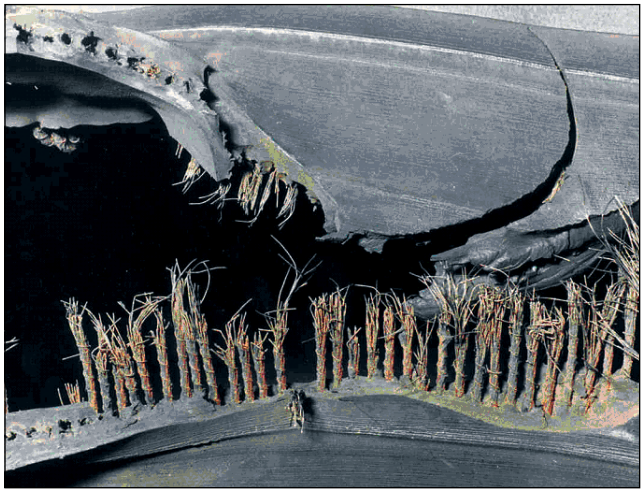

EFFECT: Any Damage That Will Allow the Casing to Oxidize
CAUSE: Moisture

*ZIPPER

A fatigue related damage, with or without a rupture, occurs in the sidewall flex area of steel radial light and medium truck tires when it is subjected to excessive flexing or heat. This zipper rupture is a spontaneous burst of compressed air and the resulting rupture can range in length anywhere from 12 inches to 3 feet circumferentially around the tire. This is caused by the damage and weakening of the radial steel cables as a result of underinflation and the tire running flat. Eventually, the pressure becomes too great for the cables to hold, and the area ruptures with tremendous force.

EFFECT: Zipper Rupture
CAUSE: Damage/Weakening of Radial Steel Cables as a Result of Underinflation and Running the Tire Flat

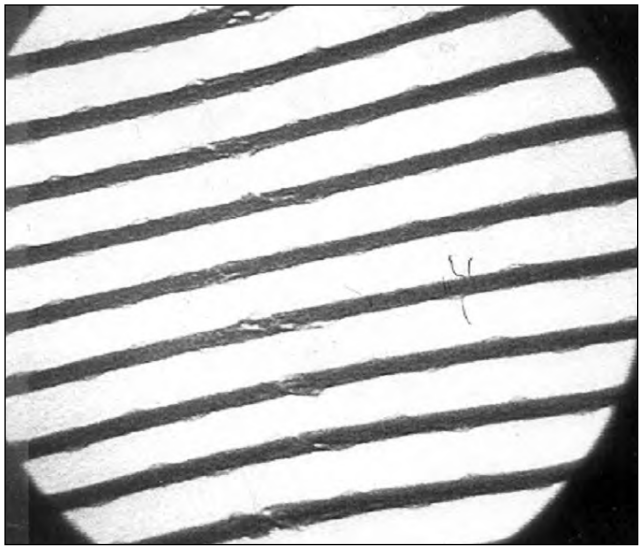

MRT X-Ray Image of Fatigue-Related Damage Without a Rupture

BEAD DAMAGE

Bead turning, cracking/splitting, unwrapping.

- Heavy brake heat generating operations
- Mechanical brake system out of specification
- Incorrect wheel width
- Excessive flex from overload/underinflation
- Mounting/Demounting (insufficient lubrication, improper tool use, aggravated by heat (beads become brittle))

EFFECT: Heating and Deformation of the Bead Rubber
CAUSE: Excessive Heat

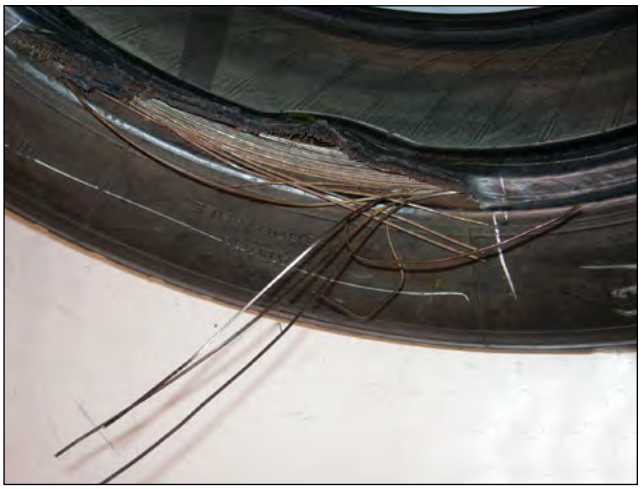

EFFECT: Bead Turning, Cracking/Splitting, Unwrapping From Heat
CAUSE: Excessive Heat

EFFECT: Bead Tearing From Mounting/Demounting
CAUSE: Insufficient Lubrication, Improper Tools

EFFECT: Bead Turning, Cracking/Splitting, Unwrapping From Heat
CAUSE: Excessive Heat

ADDITIONAL CAUSES: REPAIRS & RETREADING CONDITIONS

Improperly Aligned Repair (Note that the arrows on the patch do not point toward the beads.)

Rupture on Improperly Aligned Repair (Note that the arrows on the patch do not point toward the beads.)

Bad Sidewall Spot Repair

Bad Bead Repair

Tread Edge Lifting

Porosity

EFFECT: Improper Repair or Improper Repair Procedures
CAUSE: Premature Failure of Repair

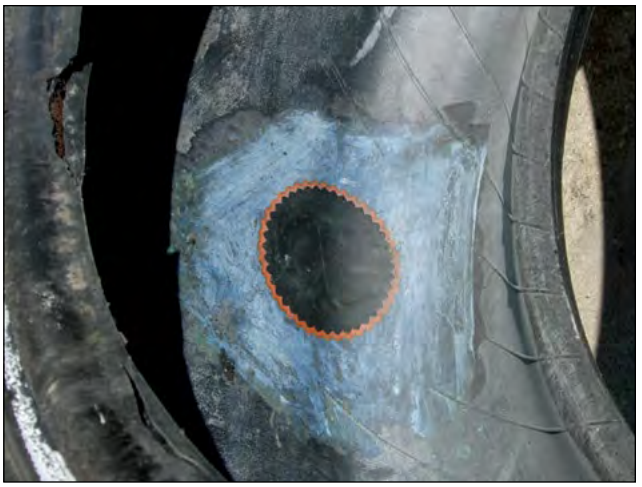

Improper Repair, Tube Repair Patch In Radial Tire, and Bead Damage from Demounting

Open Splice Joint

EFFECT: Improper/Incomplete Repair
CAUSE: Internal Sidewall Damage from Penetrating Object Not Repaired

Improper Repair, Bias Ply Patch In a Radial Tire, Note Also the Misalignment

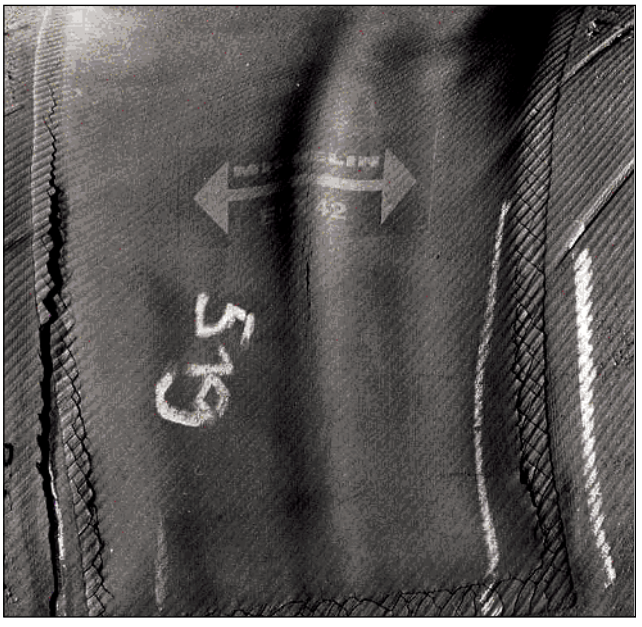

Bridged Repair (Rupture, Split, or Cracking of the Repair Material)

SCRAP INSPECTION FORM

EXAMPLE

Fleet:_____ Date:_____

SIZE	TYPE	MFR.	MFR. DOT			TREAD	RETREAD INFO			CONDITIONS		COMMENT
			PL	WK	YR	DEPTH	#	WHO	WK/YR	EFFECT	CAUSE	
275/80R22.5	*XDA-HT*	*MX*	*B6*	*29*	*92*	*07/32*	*2*	*RRL*	*148*	*RF*	*SP*	
275/80R22.5	*XT-1*	*MX*	*B6*	*4*	*98*	*05/32*	*0*			*IM*	*SI*	
275/80R22.5	*XT-1*	*MX*	*B6*	*1*	*98*	*08/32*	*0*			*PS*	*CD*	
275/80R22.5	*XDN2*	*MX*	*M5*	*35*	*95*	*07/32*	*1*	*RRL*	*18*	*ZP*	*IR*	

Fleet:_____ Date:_____

SIZE	TYPE	MFR.	MFR. DOT			TREAD	RETREAD INFO			CONDITIONS		COMMENT
			PL	WK	YR	DEPTH	#	WHO	WK/YR	EFFECT	CAUSE	

Tire Condition Index: Effect and Cause

SECTION TEN

Appendix

Section Ten

Appendix 159-187

GENERAL INFORMATION 160-163

- Units of Measurement
- Pressure Unit Conversion Table
- Load Range/Ply Rating
- Approximate Weight of Materials
- Load Index
- Conversion Table (Standard – Metric – Degrees)
- Speed Symbol

RUNOUT TOLERANCES 164

FRONT END ALIGNMENT 164

- Toe
- Camber
- Caster

AXLE ALIGNMENT 165

- Tandem Scrub Angle or Skew
- Thrust Angle Deviation
- Steering Axle Offset
- Drive Axle Offset
- Steering Axle Skew

ALIGNMENT - FIELD METHOD 166-167

CASING MANAGEMENT 168-169

COLD CLIMATE PRESSURE CORRECTION DATA 169

COST ANALYSIS 170

FUEL SAVINGS 171

MOUNTING PROCEDURES FOR 16.00R20 AND 24R21 172

TIRE REVOLUTIONS PER MILE CALCULATION 173

OUT-OF-SERVICE CONDITIONS 174-175

RUNOUT AND VIBRATION DIAGNOSIS 176-178

SERVICING MULTI-PIECE AND SINGLE PIECE RIM/WHEELS (OSHA 1910.177) 179-181

REGROOVING 182-183

TRANSIT APPLICATIONS IN URBAN CONDITIONS 184

THE CRITICAL 6 - FACTORS THAT COST FLEETS MONEY 185

PUBLICATIONS, VIDEOS, AND WEBSITES 186-187

INDEX 188

GENERAL INFORMATION

UNITS OF MEASUREMENT

Quantity	S.I. Units	Other Units
Length	m (meter)	1 inch (") = 0.0254 m or 25.4 mm 1 mile = 1609 m (1.609 km) 1 kilometer = 0.621 mile
Mass	kg (kilogram)	1 pound (lb) = 0.4536 kg 1 kilogram (kg) = 2.205 lbs.
Pressure	kPa (Pascal)	1 bar* = 100 kPa 1 psi = 6.895 kPa 1 pound per square inch 1 kg/cm2 - 98.066 kPa
Speed	m/s (meter per second)	1 kilometer per hour (kph)* = 0.27778 m/s 1 mile per hour (mph) = 0.4470 m/s (or 1.60935 kph)

* Non S.I. unit to be retained for use in specialized fields.

LOAD RANGE/PLY RATING

B – 4
C – 6
D – 8
E – 10
F – 12
G – 14
H – 16
J – 18
L – 20
M – 22

PRESSURE UNIT CONVERSION TABLE

kPa	bar	lb/in²*	kg/cm²*
100	1.0	15	1.0
150	1.5	22	1.5
200	2.0	29	2.0
250	2.5	36	2.5
300	3.0	44	3.1
350	3.5	51	3.6
400	4.0	58	4.1
450	4.5	65	4.6
500	5.0	73	5.1
550	5.5	80	5.6
600	6.0	87	6.1
650	6.5	94	6.6
700	7.0	102	7.1
750	7.5	109	7.7
800	8.0	116	8.2
850	8.5	123	8.7
900	9.0	131	9.2
950	9.5	138	9.7
1000	10.0	145	10.2
1050	10.5	152	10.7

* Values in psi and kg/cm² rounded to the nearest practical unit.

APPROXIMATE WEIGHT OF MATERIALS

Most materials and commodities vary in weight – the following weights should be used only for approximation purposes. Exact weights should be obtained from local sources when making recommendations for truck or tractor-trailer equipment.

	Lbs. per Cu. Ft.	No. of Pounds	Per:
Beans, dry		60	Bushel
Cement, Portland	—	94	Bag
Clay and Gravel, dry	100	2700	Cu. Yd.
Clay and Gravel, wet	65	1755	Cu. Yd.
Coal, Hard or Anthracite, broken	52-57	1400-1540	Cu. Yd.
Coal, Soft or Bituminous, solid	79-84	2134-2270	Cu. Yd.
Concrete	120-155	3200-4185	Cu. Yd.
Corn, in ear	—	70	Bushel
Corn, shelled	—-	56	Bushel
Corn Syrup	86	11.5	Gallon
Crude Oil	52	700	100 Gal.
Fuel Oil	52-74	695-795	100 Gal.
Gasoline	45	600	100 Gal.
Gravel	100-120	2700-3240	Cu. Yd.
Gravel and Sand, dry, loose	90-100	2430-2862	Cu. Yd.
Gravel and Sand, dry, packed	110	2970	Cu. Yd.
Gravel and Sand, wet	120	3240	Cu. Yd.
Milk	—-	845-865	100 Gal.
Paper, average weight	58		
Oats	—-	32	Bushel
Potatoes, White or Irish	—	60	Bushel
Petroleum	—	800	100 Gal.
Sand, dry, loose	90-106	2430-2860	Cu. Yd.
Sand, moist, loose	120	3240	Cu. Yd.
Soy Beans	—-	60	Bushel
Water	62.4	835	100 Gal.
Wheat	—-	60	Bushel

LOAD INDEX

The ISO* LOAD INDEX is a numerical code associated with the maximum load a tire can carry at the speed indicated by its SPEED** SYMBOL under service conditions specified by the tire manufacturer. (1 kg = 2.205 lbs.)

Load Index	kg	lbs.
100	800	1,765
101	825	1,820
102	850	1,875
103	875	1,930
104	900	1,985
105	925	2,040
106	950	2,095
107	975	2,150
108	1,000	2,205
109	1,030	2,270
110	1,060	2,335
111	1,090	2,405
112	1,120	2470
113	1,150	2,535
114	1,180	2,600
115	1,215	2,680
116	1,250	2,755
117	1,285	2,835
118	1,320	2,910
119	1,360	3,000
120	1,400	3,085
121	1,450	3,195
122	1,500	3,305
123	1,550	3,415
124	1,600	3,525
125	1,650	3,640
126	1,700	3,750
127	1,750	3,860
128	1,800	3,970
129	1,850	4,080
130	1,900	4,190
131	1,950	4,300
132	2,000	4,410
133	2,060	4,540

Load Index	kg	lbs.
134	2,120	4,675
135	2,180	4,805
136	2,240	4,940
137	2,300	5,070
138	2,360	5,205
139	2,430	5,355
140	2,500	5,510
141	2,575	5,675
142	2,650	5,840
143	2,725	6,005
144	2,800	6,175
145	2,900	6,395
146	3,000	6,610
147	3,075	6,780
148	3,150	6,940
149	3,250	7,160
150	3,350	7,390
151	3,450	7,610
152	3,550	7,830
153	3,650	8,050
154	3,750	8,270
155	3,875	8,540
156	4,000	8,820
157	4,125	9,090
158	4,250	9,370
159	4,375	9,650
160	4,500	9,920
161	4,625	10,200
162	4,750	10,500
163	4,875	10,700
164	5,000	11,000
165	5,150	11,400
166	5,300	11,700
167	5,450	12,000

Load Index	kg	lbs.
168	5,600	12,300
169	5,800	12,800
170	6,000	13,200
171	6,150	13,600
172	6,300	13,900
173	6,500	14,300
174	6,700	14,800
175	6,900	15,200
176	7,100	15,700
177	7,300	16,100
178	7,500	16,500
179	7,750	17,100
180	8,000	17,600
181	8,250	18,195
182	8,500	18,745
183	8,750	19,295
184	9,000	19,845
185	9,250	20,400
186	9,500	21,000
187	9,750	21,500
188	10,000	22,050
189	10,300	22,720
190	10,600	23,400
191	10,900	24,040
192	11,200	24,700
193	11,500	25,360
194	11,800	26,020
195	12,150	26,800
196	12,500	27,565
197	12,850	28,355
198	13,200	29,110
199	13,600	30,000
200	14,000	30,870
201	14,500	31,980

* International Standardization Organization
** Exceeding the legal speed limit is neither recommended nor endorsed.

CONVERSION TABLE

			Size: 275/80R22.5 Overall Diameter: 40.1
Inches (decimal)	Inches (fraction)	Millimeters	Degrees
0.03125	1/32	0.8	0.04
0.06250	1/16	1.6	0.09
0.09375	3/32	2.4	0.13
0.12500	1/8	3.2	0.18
0.15625	5/32	4.0	0.22
0.18750	3/16	4.8	0.27
0.21875	7/32	5.6	0.31
0.25000	1/4	6.4	0.36
0.28125	9/32	7.1	0.40
0.31250	5/16	7.9	0.45
0.34375	11/32	8.7	0.49
0.37500	3/8	9.5	0.54
0.40625	13/32	10.3	0.58
0.43750	7/16	11.1	0.63
0.46875	15/32	11.9	0.67
0.50000	1/2	12.7	0.71

SPEED SYMBOL**

The ISO* SPEED SYMBOL indicates the speed at which the tire can carry a load corresponding to its Load Index under service conditions specified by the tire manufacturer.

Speed Symbol	Speed**	
	kph	mph
A1	5	2.5
A2	10	5
A3	15	10
A4	20	12.5
A5	25	15
A6	30	20
A7	35	22.5
A8	40	25
B	50	30
C	60	35
D	65	40
E	70	43
F	80	50
G	90	56
J	100	62
K	110	68
L	120	75
M	130	81
N	140	87

* International Standardization Organization
** Exceeding the legal speed limit is neither recommended nor endorsed.

RUNOUT TOLERANCES (LATERAL AND RADIAL)

TMC Tire / Wheel Assembly Specifications	TMC Rim/Wheel Specifications
0.080”	0.070” (STEEL) 0.030” (ALUMINUM)

Note: Vibration can be felt on some vehicles with values lower than the stated specifications.
For best results, maintain radial and lateral runout less than .060” for the Tire/Wheel Assembly when possible.

FRONT END ALIGNMENT

TOE	
Target:	Steer: +1/16” (+1.5 mm)
Target:	Drive & Trailer: 0
Measurement:	J – I
Symptoms:	Feathered Wear

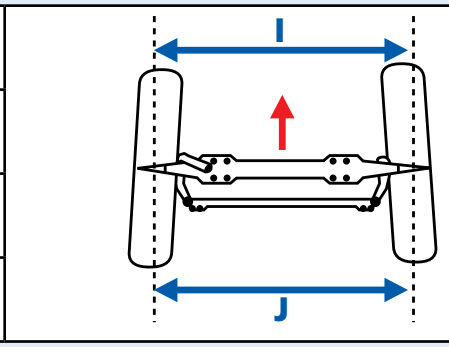

CAMBER	
Target:	Steer Loaded: 0° to 1/4° or 0 to 2.5 mm
Target:	Drive & Trailer: ±1/4° or ±0 to 2.5 mm
Measurement:	K – L
Symptoms:	Shoulder Wear Pulling (Large variation left/right) Pulls to side with most positive camber

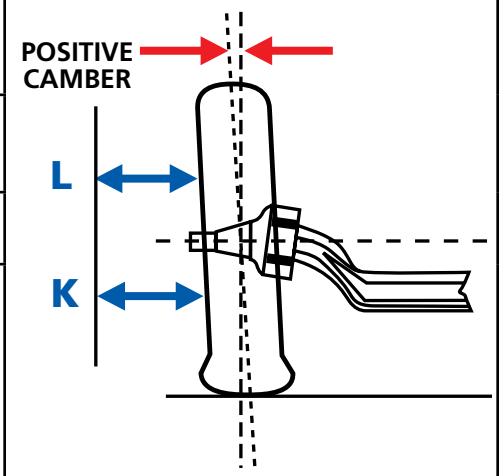

CASTER	
Target:	Steer Only: Left +3.5° Right +4.0°
Measurement:	Alignment Machine
Symptoms:	Wander (Caster too low) Slow or no return to center Shimmy or harsh ride (Caster too high) Rapid return to center Pull to side with least positive caster These settings allow for ease of steering and assist in counteracting road crown

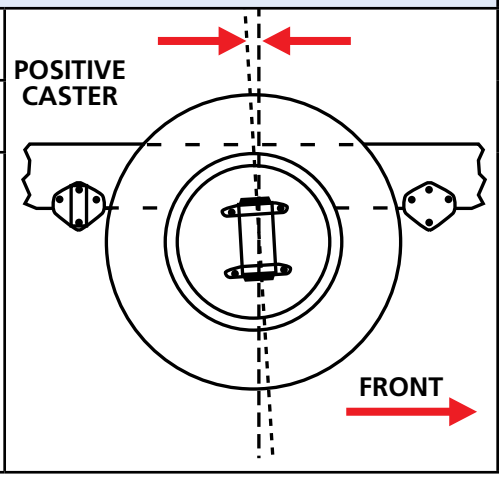

AXLE ALIGNMENT

TANDEM SCRUB ANGLE OR SKEW

Target: Tolerance:	0 ±1/8” or ±3 mm
Measurement:	A ± B
Symptoms:	Steer tire shoulder wear and/or feathered wear Excessive drive tire wear Pulling, driver counter steers Tandem Hop

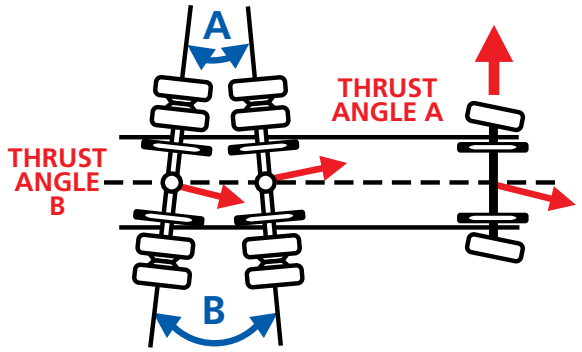

THRUST ANGLE DEVIATION

Target: Tolerance:	0 Based on wheel base: 15 mm < 150”, 20 mm 150-200”, 25 mm > 200”
Measurement:	C ± D
Symptoms:	Steer tire shoulder wear Pulling slightly to significant

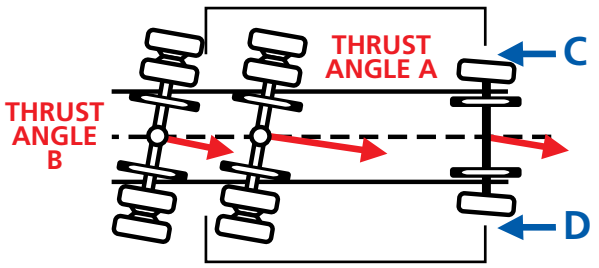

STEERING AXLE OFFSET

Target: Tolerance:	0 ±3/16” or ±5 mm
Measurement:	(E ± F)/2
Symptoms:	Steer tire shoulder wear Pulling slightly

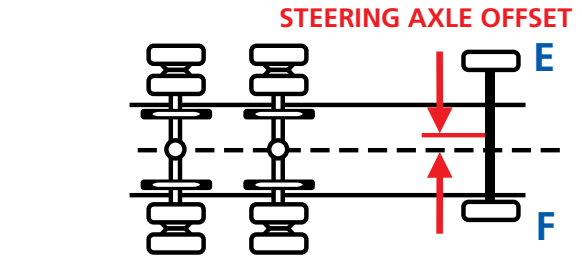

DRIVE AXLE OFFSET

Target: Tolerance:	0 ±3/16” or ±5 mm
Measurement:	(G ± H)/2
Symptoms:	Pulling slightly

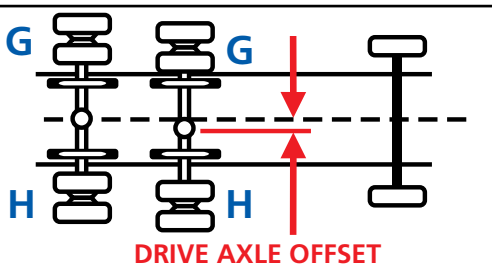

STEERING AXLE SKEW

Target: Tolerance:	0 ±3/16” or ±5 mm
Measurement:	Alignment Machine
Symptoms:	Pulling. Steer tire wear could be significant

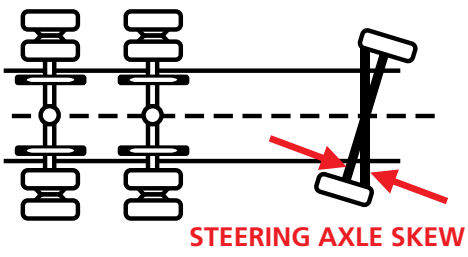

ALIGNMENT - FIELD METHOD

ATTACC PLUS SYSTEM (Axle, Thrust, Toe, Ackerman, Camber, Caster Parts, Labor, User Saves)

- Simple vehicle measurement system
- Quick, low cost, yet effective method
- Determine if poor alignment conditions exist
- Minimum tools required

For more information about ATTACC PLUS refer to Michelin Vehicle Alignment: ATTACC Plus Video at **http://www.michelintruck.com/reference-materials/videos/#/maintenance-and-training**

SET-UP INSTRUCTION PROCEDURES

TOOLS:

- Chalk Line (no chalk)
- 2 Cans of White Spray Paint
- 2 Large Heavy Duty Plastic Bags
- Vehicle Jack (10 Tons)
- Line Level and Wheel Chocks
- Metric Tape Measure
- 1 pair of Jack Stands
- Toe-Scribe
- Flashlight
- 1 T-45A Tire Iron

SURFACE: Inspection site should be fairly level; use Line Level if necessary to determine slope.

STEER/DRIVE TIRES: Note tread design, DOT, tread depth, psi, tire conditions and mileage, and all normal pertinent vehicle information.

VEHICLE POSITIONING

1. Drive vehicle straight into inspection site, at least 3 full vehicle lengths, to ensure it's straight into site. Driving into and backing out of the work area several times will ensure the vehicle's suspension components are relaxed to achieve proper measurements.

2. Allow vehicle to roll to a stop, shut-off the engine, and let up on the clutch.

3. Let vehicle fully stop by transmission, no brakes.

4. Engage tractor parking brakes and take out of gear; place wheel chocks on the drive tires.

MEASUREMENTS

Record all measurements.

Front of Vehicle

1. Measure steering axle skew from the front of the outside U-bolt to the zerk fitting (or bolt) on the front spring pin perch. Tolerance is ± 3/16" or 5 mm side to side.

2. Measure for straight ahead steering from the inner wheel flange to edge of the leaf spring (if newer style tapered frame) or frame on both sides of the vehicle to ensure the steer tires are straight ahead (tolerance is 1/32" or 1 mm side to side). Adjust the steering wheels as necessary to come within tolerance. Mark the steering wheel column with a crayon for future reference.

3. Measure for steering axle offset from the frame rail to the vertical center line on the tire on both sides. Tolerance is ± 3/16" or 5 mm from centerline of vehicle.

4. Steering Stops: Ensure they are in place on left and right sides, and measure length. Stops control the angle of the turn and may be a consideration if abnormal steer tire wear is present.

5. Check front end components and toe by jacking up front end after placing wheel chocks on the rear tires. Place the floor jack under the axle for support, use the T-45A tire iron by inserting into the wheel assembly at the 6 o'clock position and place your other hand at the 12 o'clock position. With a rocking type motion try to move the tire assembly up with the lower bar and out towards you with your left hand. If play is felt, it is probably the result of loose wheel bearings or worn kingpin bushings. If you observe the brake chamber moving, it can be isolated to the kingpin bushing. If it does not move, it is likely the wheel bearings.

With your hands placed at the 3 o'clock and at the 9 o'clock positions on the tire, try to move the tire in a rapid "left turn – right turn" type of motion. Feel and listen for any play. Play in this area would indicate either loose or worn tie rod ends, steering arms, drag link ends, or steering box play. Any play in this area should be further inspected to ensure it is within the vehicle and/or part manufacturer's specifications.

Two additional parts that can cause tire wear need to be checked. First, see if the brake drum has a balance weight and second, look for wear on the spring shackle assembly. This check is more difficult to make, and there are various ways to inspect for this wear. Consult the part manufacture for the proper way to inspect.

On a dry tire, with a can of spray paint, marker, or chalk (dusting with any coating material suitable for marking a section of tread), "highlight" a section of the tread area around the tire. With a sharp pointed scribe, mark a thin line in the highlighted area while rotating the tire. (Note: At this point observe the amount of radial and lateral runout by referencing this line to the rotating tire. Any runout greater than 3/32" should be further investigated for improper tire bead seating, improper tire and wheel runout and/or improper wheel torque procedure during installation.)

Repeat this process on the other steer tire. Check for steer ahead by referencing the mark on the steering wheel column (or measure as in Paragraph 2 above), and lower the vehicle on the folded plastic bags. Plastic should be folded to just larger than the tire footprint so that no part of the steer tires will make contact with the ground. Prior to measuring, you should "joust" the vehicle by standing on the step and shaking the unit with your body weight.

This will further relax the front suspension, giving you a correct toe reading. Once the steer tires are down, measure from side to side between the scribed lines, first rear, then front, with a tape measure or a fine lined toe gauge to determine relative toe. Do this with the paint cans on the ground, centered on the scribe line, and measure the distance between the lines on the left and right tire at the paint can height. Subtract front from rear: positive result indicates toe-in, negative is toe-out. At this paint can height: total toe-in should be positive +1 mm so that the tires will run in a straight line under a dynamic, loaded condition. Recommended toe setting is +1/16" (1.5 mm).

6. If checking for camber, with wheels straight ahead, drop a plumb line off the front fender over the tire assembly center and measure the distance, using millimeters, between the string and rim flange at the top and bottom. Divide your difference by 10 to convert millimeters to degrees. Use the paint can to extend out from the fender if necessary. Repeat the procedure on the other steer position. Consider any floor slope, mismatched inflation pressures, or mismatched tread depths.

Rear of Vehicle

1. Measure for drive axle offset by measuring, at each drive axle wheel position, from the inner wheel flange to the inside of the frame rail (tolerance: 3/16" or 5 mm side to side).

2. Check ride height by measuring the distance from the lower part of the frame rail to the bottom of the air spring (bag) housing. Verify manufacturer's recommendation for vehicle type.

3. Measure for tandem axle skew by measuring between the rim flanges. Kneel between the outside of the tires. Hook the metric tape measure at hub-height on one, and by using a swinging arc on the other, determine the shortest distance between them. Take a similar measurement on the other side of the vehicle (tolerance is 1/8 inch or 3 mm between axle ends).

4. Measure for drive axle thrust by using the string from the front drive axle to the steer position. Attach the string to the drive tire at hub-height, bring it across the rear sidewall, move to the steering axle, bring the string in toward the front wheel until it touches the drive tire's front sidewall, and measure the distance between the string and disc face of the wheel (just below the dust cap). Repeat this method on the other side.

With all data recorded, review measurement of drive axle offset. Any significant drive axle offset, if found (± 3/16" or ± 5 mm), must be factored into the readings of drive axle thrust as determined above by adding or subtracting the offset from the appropriate side (string to front wheel flange measurement ± offset).

Draw a picture of the steer and drive axle orientation using recorded axle skew measurements.

Drive axle skew tolerance is based on wheel base:

19/32" or 15 mm < 150 inch
3/4" or 20 mm 150-200 inch
1" or 25 mm > 200 inch

ATTACC PLUS WORKSHEET

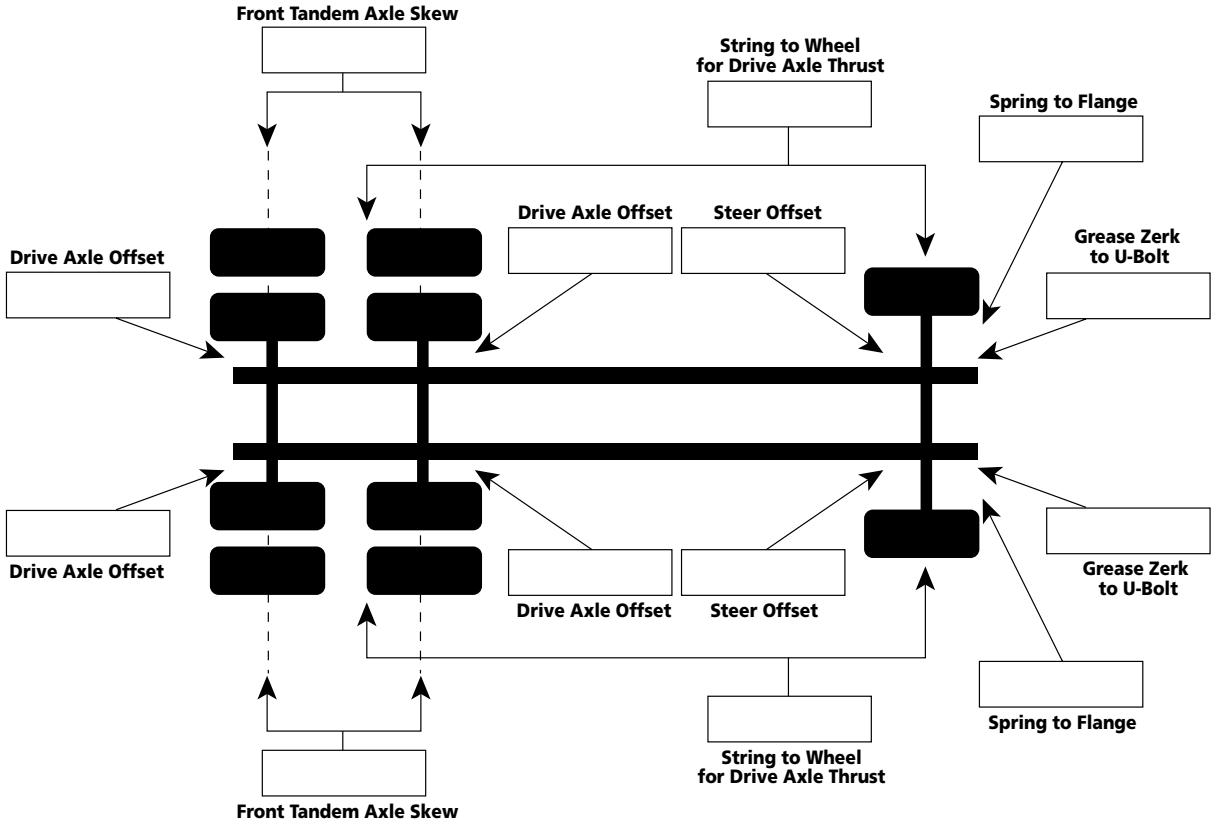

CASING MANAGEMENT

TIRE MANAGEMENT

The goal of every truck operator is to achieve the lowest possible operating cost, taking advantage of the performance built into each high tech MICHELIN® radial truck tire. Tire maintenance, proper inflation pressures, repairs, vehicle alignment, and retreading, are all keys to help ensure maximized performance and extended casing life.

Over the past 10 years, a number of operational and product changes have occurred that should be considered when establishing tire use patterns. The single most important point of any program is "Know Your Customer."

TIRE CHANGES

1. New Tires: Today's wider treads and deeper tread depths provide more original tread miles. The tire arrives at the retreader with more time in service, more miles, and exposure to road conditions.

2. Retread Changes: Wider treads, new tread designs, and new compounds have increased retread mileages.

VEHICLE CHANGES

1. Longer Trailers: There has been a move from 40' to 48' and 53' trailers as standards in the contract and private carriage business.

2. Wider Trailers: Widths have increased from 96" to 102". The combination of longer and wider trailers increases the frequency of the duals being curbed.

3. Setback Front Axles: Moving the steer axle back increases stress on steer tires and load efficiency by allowing better load distribution. The result is higher average axle loads.

4. Electronic Engines: Better engine control and more efficient operation improve the ability of the vehicle to maintain higher cruise speeds.*

OPERATIONAL CHANGES

1. Speed limit: The national limit has continually increased in the past decade.*

2. GVW (Gross Vehicle Weight): With the Surface Transportation Assistance Act of 1983, the weight limits went from 73,280 lbs. to 80,000 lbs. With setback axles, you can realistically load to 80,000 lbs.

3. Greater Vehicle Utilization: More loaded miles mean productivity gains.

* Exceeding the legal speed limit is neither recommended nor endorsed.

All of these changes lead to the casing arriving at the retread stage with a higher level of fatigue. To utilize these casings to their maximum, casing management should be employed in the selection of the retread.

CASING MANAGEMENT IN THE PAST

Highway fleets typically employ the casing management pattern below:

Tire First Used On		Position of First Retread Use		Position of Subsequent Retread Use
Steer	»	Drive or Trailer	»	Drive or Trailer
Drive	»	Drive	»	Drive or Trailer
Trailer	»	Trailer	»	Trailer

CASING FATIGUE

In terms of casing fatigue, the severity of use is as follows:

- **Drive Axle – most fatigue.** New drive tires (lug type) often can accumulate twice as many miles (or more) before retreading than new steer or trailer tires can. The same is true for drive axle lug type retreads. The tires also run hotter (deeper tread) and with more torque.
- **Steer Axle – moderate fatigue.** Steer axle tires operate at higher average loads than drive or trailer tires (20 to 40% higher). However, they wear out sooner than drive tires and are moved to lighter axles in the retread stage.
- **Trailer Axle – least fatigue.** The trailer tire starts life with a shallow (cooler) tread and is usually retreaded with a shallow retread. Annual miles are low. The trailer tire casing usually sees more curb abuse, neglect, and old age problems.

Thus, the practice of retreading new drive axle tires back to the drive axle puts the most highly fatigued casing back onto the most highly stressed wheel position.

CASING MANAGEMENT FOR THE FUTURE

The following guidelines are recommended in sorting casings for their next tread life. Such a sorting would allow the fleet and retreader to make better decisions regarding the handling and utilization of casings recovered from 6x4, 4x2, and trailer applications. Casings that are judged to be more "highly fatigued" should be retreaded in one of two ways:

1. A low rolling resistance/low heat retread rubber in rib and drive (consult your retread supplier).
2. A shallow retread (no more than 15/32").

These retreads will reduce the operating temperature in the crown of the tire.

Determining which tires are "highly fatigued" requires a working knowledge of each fleet's individual operation. The following guidelines can be used:

1. Two or more repairs on the casing.
2. Heavy sidewall abrasion.

TREAD SELECTION MATRIX

It would seem best to adopt the casing management pattern below for tires in highway service:

Tire First Used On		Position of First Retread Use		Position of Subsequent Retread Use
Steer	»	Drive or Trailer	»	Trailer
Drive	»	Drive or Trailer	»	Trailer
Trailer	»	Drive or Trailer	»	Trailer

RETREAD RECOMMENDATIONS

1. Follow the retread manufacturer's recommendations.
2. Use the preferred tread size.
3. Buff to the correct crown radius.
4. Use pilot skives to measure undertread; 2/32" to 3/32" is all that should remain when buffing is complete.

PREVIOUS SERVICE LIFE

In light of all these conditions and recommendations, the purchaser of casings for retreading should proceed with caution. Use the tread selection matrix when previous service life is unknown.

COLD CLIMATE PRESSURE CORRECTION DATA

Because the pressure inside a tire will decrease when the vehicle is taken from a warm environment to a cold one, some adjustments may be necessary when adjusting the tire pressures of a vehicle to be operated in very cold temperatures.

These adjustments are only necessary if the pressures are verified and adjusted inside a heated garage with an air supply that is also at the higher room temperature. (No adjustment necessary if done outside.)

In extreme cases, the following table should be used to ensure that the operating pressure and deflection of tires are adequate at the outside ambient temperature.

Using the load and pressure charts below, determine the appropriate "Recommended Pressure" required for the axle load. Then find the same pressure down the left column of the table to the right. Going across to the relevant outside ambient temperature you will find the corrected inflation pressure to be used.

For example:

- A log truck in Alaska has a front axle loaded weight of 12,000 lbs.
- The truck is equipped with 11R24.5 MICHELIN® XZY®3 tires.
- The recommended pressure for this fitment is 105.
- The truck is parked overnight in a heated garage.
- The outside high forecasted for today is -20ºF.
- The tire pressures are checked and adjusted prior to leaving the heated garage.

According the chart below, the tires should be adjusted to 128.

Adjusted Inflation Pressure (psi) when inflating indoors at 65°F [18°C]

Recommended Pressure (psi)	Outside Ambient Temperature										
	F° 50°	40°	30°	20°	10°	0°	-10°	-20°	-30°	-40°	-50°
	C° 10°	4°	-1°	-7°	-12°	-18°	-23°	-29°	-34°	-40°	-46°
75	78	80	81	83	86	88	90	92	95	98	100
80	83	85	87	89	91	93	96	98	101	104	107
85	88	90	92	94	97	99	102	104	107	110	113
90	93	95	98	100	102	105	108	110	113	116	119
95	98	101	103	105	108	111	113	116	119	123	126
100	103	106	108	111	113	116	119	122	125	129	132
105	109	111	114	116	119	122	125	128	132	135	139
110	114	116	119	122	125	128	131	134	138	141	145
115	119	122	124	127	130	133	137	140	144	148	151
120	124	127	130	133	136	139	143	146	150	154	158
125	129	132	135	138	141	145	148	152	156	160	164
130	134	137	140	144	147	150	154	158	162	166	171

⚠WARNING **Do not drive on improperly inflated tires. Doing so may lead to excessive heat build up, tire failure, injury or death.**

COST ANALYSIS

Each fleet operation is different, but there is one consistent goal and that is to achieve the best possible operating cost. This section is designed to provide a guide to determining a Cost Per Mile (CPM).

The simplest CPM is found by dividing the price of the tire and any retread by the total mileage. While this is an easy calculation, it is very misleading by ignoring many of the added benefits of the tire or the transfer of residual casing value from one life to another.

Determining CPM by wheel position could provide an important gauge for performance since each wheel position is a very special case with unique operating requirements. Here are some of the key elements that need to be considered in any analysis:

1. Total mileage (considers new and retread mileage for steer, drive, and trailer)
2. Residual casing values or casing resale value
3. Requirements of the specific wheel position (steer, drive, and trailer)
4. Repairability (dollars spent on additional mounts and dismounts, repair time and labor)
5. Retreadability (additional casing purchases)
6. Fuel efficiency (see section below)
7. Total expected casing life
8. Labor (scheduled and unscheduled)
9. Road call (by shop personnel as well as Emergency calls)
10. Disposal fees
11. Liability Insurance

An estimate of the CPM obtained by different tires in different wheel positions is shown in the examples below.

STEER AXLE

a. MICHELIN® X® LINE™ ENERGY Z	
New Tire Price (estimated)	$616.00
b. Residual Casing Value (estimated)	- $60.00
c. Total Miles (estimated)	÷ 120,000.00
d. CPM = per mile	$ 0.00463

DRIVE AXLE

a. MICHELIN® X® LINE™ ENERGY D Energy	
New Tire Price (estimated)	$670.00
b. Residual Casing Value (estimated)	- $60.00
c. Total Miles (estimated)	÷ 250,000.00
d. CPM = per mile	$ 0.00508

YOUR OPERATION

a. New Tire Price	$
b. Residual Casing Value	-
c. Total Miles	÷
d. CPM = per mile	

FUEL SAVINGS

Tires are a major component in the operating efficiency of the vehicle as a result of their rolling resistance. Rolling resistance is defined as how much effort it takes to roll a tire with a given load and pressure. This tire rolling resistance is approximately 1/3 of the total vehicle resistance in 6x4 and 6x2 applications and as such, a change of 3% in rolling resistance equals a 1% change in fuel consumption. Wind resistance and drive line friction account for the balance of the resistance.

The MICHELIN® tires with Advanced Technology™ compound are built to maximize energy conservation. And the MICHELIN® X One® tire in drive and trailer positions can even provide an increase over these Advanced Technology tires.

A change in rubber compound can provide a large reduction in rolling resistance, although it is unacceptable to sacrifice durability and wet traction to achieve this result. The Advanced Technology compound is a sophisticated mix of tread design, complex rubber chemistry, and advanced casing design all used while maintaining mileage, wet traction, and durability.

As fuel costs continue to increase, fuel expenditures become even more critical than tire expenditures. The ratio of fuel to tire costs will range from 8:1 to 15:1 based on the fleet operation in regional and long haul applications.

To calculate potential fuel savings:

A. Cost of Fuel/Gal. $ _____

B. Annual Miles _____

C. MPG of the Vehicle _____MPG

D. Total Estimated Fuel

B ÷ C = gallon _____

E. % Fuel Savings % _____

F. Estimated Fuel Savings

(E x D) = gallon _____

(F x A) = $ _____

For a more in-depth calculation, consideration should be given to looking at the rolling resistance factors for the specific tires you are considering and ask for the assistance of your Michelin Representative in determining the savings. The next step would be to conduct an SAE (Society of Automotive Engineers) Type J1376 Type II fuel test and eliminate all the variables. Again, refer to your Michelin Representative for assistance.

The SAE Type J1376 Fuel Test is a standard test procedure for evaluating the relative fuel economy of given vehicles. Test cycles are conducted over 2 to 3 days on a circular route of 30 miles, utilizing two vehicles of similar design and load with fuel supplied by portable tanks. While using the same steer, drive, and trailer tires, a 2% ratio of both circuit time and of fuel weight consumed must be established. All other variables will have been minimized by the constraints of the test procedures. Once the baseline has been established, the test tires will be placed on the test vehicle, and the difference in fuel consumption can be determined based on the completion of 3-5 runs falling within the 2% ratio.

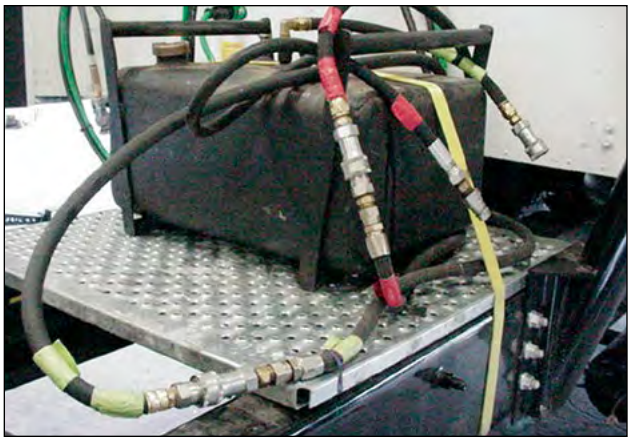

MOUNTING PROCEDURES FOR 16.00R20 AND 24R21

MOUNTING PROCEDURES FOR 16.00R20 AND 24R21 MICHELIN® XL™ OR XZL™ TIRES

Correct procedure for mounting multi-piece wheels for tubeless truck tires includes proper mounting and correct pressure.

Three-piece wheels consist of rim base, tapered bead seat, and locking ring. Mounting tools include: large bore valve, O-ring seal, brush or clean cloth with lubricant, small pallet of wooden blocks, inflation hose with a chuck or large bore valve, and miscellaneous tools.

The first step in mounting is to properly position the wheel base by placing the wheel on the small pallet or blocks to raise it off the floor, facilitating the lock ring installation. Note that the wheel is placed on the support with the fixed flange side down. Using the large bore valve, lightly lubricate the rubber grommet on the valve base; insert and secure with the hex nut of both sides. Always use a large bore valve and not a standard truck valve since the larger diameter will permit better tire pressure flow and better bead seating.

WHEEL LUBRICATION

With a clean cloth or brush, lightly lubricate the rim base completely except for the two upper grooves. Lubrication in these grooves can cause the O-ring to be rolled out of the groove by the tapered bead seat when inflating the assembly. It is important to use a heavy lubricant such as MICHELIN® Bib Grease or Murphy's. Heavy lubricants do not dry as quickly, thus allowing more time to seat the beads during inflation.

LUBRICATION OF THE BEAD

Using a brush or clean cloth, lubricate the inside and outside of each tire bead area. This procedure plus the rim lubrication will allow the tapered bead seat ring to be installed more easily and allow the tire beads to seat properly during inflation.

TIRE PLACEMENT ON THE WHEEL

Place the tire on the wheel base. This can be done manually or by fork lift truck for easier handling. Exercise caution when sliding the forks below the sidewalls of the tires since an impact by the forks can damage the casing cords. Lifting the tire by the beads can damage or permanently distort the beads and should be avoided.

TAPERED BEAD SEAT RING

The bead seat ring should be lubricated on both sides before placing it on the wheel base. This allows it to slide between the tire and wheel base more easily and later over the wheel base during inflation. Lubricating the bead seating surface facilitates concentric seating of the beads during inflation.

O-RING SEAL

The most important part of tubeless mounting on multi-piece wheels is the O-ring seal under the bead seat ring. It is imperative that the correct O-ring be used and properly installed. Check O-ring length and cross section diameter for correct fit. The MICHELIN® O-ring seal reference number is 1506 for the 24R21, which is designated OR 6.8-21 for the 21-inch inside diameter. The 16.00R20 uses O-ring reference number 1681, designated OR 6.6-20 for the 20-inch or the corner ring, reference number 1443, designated A20-TYRAN. The corner ring has a slightly different mounting procedure – see wheel manufacturer for proper procedures. Some commercially available O-rings are too long. If too long, it will push out of the groove breaking the seal and the tire will loose tire pressure. Do not lubricate the O-ring prior to installation on the wheel. The lubricant tends to push the O-ring out of the groove breaking the seal. Make sure both the O-ring and the groove are free of debris. Place the O-ring in the bottom groove; it should fit tightly but not be excessively stretched.

LUBRICATION OF THE O-RING

The outer surface of the O-ring should be lightly, but well lubricated to allow the tapered bead seat to slide easily over the seal during inflation. Remember an incorrect O-ring or improper lubrication can force or push the O-ring out of the slot upon inflation causing tire pressure loss. Snap the lock ring in the upper rim groove. Check that the ring is fully seated in the groove.

INFLATION

Place the assembly in the horizontal (preferred) or vertical (if well lubricated) position for inflation in the restraining device and remove the valve core. This will allow the beads to slide more easily into position. Inflate to 80 psi for complete tire bead seating. Install the valve core and then adjust pressure to that recommended for the load and condition.

Remember the keys for good mounting are:

1. Correct size, type, and compatibility of components
2. Proper lubrication and mounting procedures
3. 80 psi initial inflation pressure for bead seating, followed by adjustment to recommended pressure.

Adherence to these simple guidelines will ensure maximized performance and minimized downtime due to tire mismount.

If you are having difficulty in mounting or cannot get the assembly to inflate or hold tire pressure, an incorrect component or incorrect inflation is probably the cause.

TIRE REVOLUTIONS PER MILE CALCULATION

MEASURED TIRE REVOLUTIONS PER MILE

At Michelin, Tire Revolutions per Mile (tire RPM) are determined using a method based on the SAE (Society of Automotive Engineers) Recommended Practice J1025. The test tires are placed in a single fitment on the drive axle of the test vehicle, loaded to the maximum dual load rating of the tire and set to the corresponding pressure. The vehicle is then driven on a test track at 45 mph while the revolutions are counted. Since speed minimally affects the results for radial tires, other speeds are allowed. Four runs must be completed with results that are consistent within 1%. The tire RPM specification is calculated as the average (mean) of the four runs. The results are verified using shorter distances that are more easily obtained. The test tire is also compared to a known baseline tire on a road wheel. This latter method is very accurate and repeatable when using a similar baseline tire with a known tire RPM. The SAE procedure recognizes that there will be some variation within the test method. In fact, there are other factors that cause variation in tire RPM among similar tires. Please note that although similar tires may have the same overall diameter, it does not necessarily mean that they will have the same tire RPM. The SAE procedure determines the tire RPM to within ± 1.5%.

Some factors, which cause variation among tires, are:

- **Load and Pressure** – A difference in Load/Pressure could alter the Tire Revs./Mile measurement by as much as 1.5%. If pressure is constant, going from an empty vehicle to a fully loaded vehicle can change the Tire Revs./Mile by 1 to 1.5%.
- **Treadwear** – The Tire Revs./Mile varies from a new tire to a fully worn tire. This can affect Tire Revs./Mile by as much as 3% from the rated Tire Revs./Mile.
- **Tread Geometry** – The height and stiffness of the blocks and the shape of the tread pattern can affect Tire Revs./Mile.
- **Torque** – The presence of driving and braking torque can affect the Tire Revs./Mile.
- **Type and Condition of Pavement** – Asphalt vs. concrete, wet vs. dry can create difference in Tire Revs./Mile.

CALCULATED TIRE REVOLUTIONS PER MILE

Michelin Equation:

Tire RPM	=	20,168 / (O.D. - .8d)
O.D.	=	Overall Diameter
d	=	Correction for deflection
Deflection - e	=	(O.D./2) - SLR
SLR	=	Static Loaded Radius (Ref. Michelin Truck Tire Data Book)

Example: 275/80R22.5 MICHELIN® X® MULTI DRIVE LRG

New Tire

O.D.	=	40.5
SLR	=	19.0
d	=	(40.5/2) - 19.0
Deflection - e	=	1.25
Tire RPM	=	20,168 / (40.5 - (.8 x 1.25))
	=	20,168 / (40.5 - 1.0)
	=	20,168 / 39.5
Tire RPM	=	510.6 (Calculated) vs Data Book (Measured) Tire Revs./Mile = 510

At 50% Worn

O.D.	=	39.7 (13/32nd used is approximately 0.8 inch reduction in the O.D.)
SLR	=	18.6 (13/32nd used is approximately a 0.4 inch reduction of SLR)
d	=	(39.7/2) - 18.6
Deflection - e	=	1.25
Tire RPM	=	20,168 / (37.9 - (.8 x 1.25))
	=	20,168 / (37.9 - 1.0)
	=	20,168 / 38.7
Tire RPM	=	521 (Calculated)

OUT-OF-SERVICE CONDITIONS

DESCRIPTION

Code Key 21: New & Retread Tire Out-of-Service Conditions was developed for tire manufacturers as a means of coding out-of-service conditions as determined by manufacturer/laboratory failure analysis. It is not meant to replace related codes identified for use by technicians in *Code Key 18: Technician Failure Code*, or *Code Key 82: Operator Vehicle/ Equipment Condition Report*. Code Key 21 has two codes per condition, a two-character alpha code or an alternative four-digit numeric code. Code Key 21 was introduced with the release of VMRS 2000™ Version 1.05.

NOTE: In release of VMRS that preceded VMRS 2000™, Code Key 21 was used redundantly to denote a vehicle group/ system. The information once contained in Code Key 21 was assigned to VMRS 2000™ Code Key 31 in 1997.

Code (Alpha)	Code (Numeric)	Description
Bead Area		
FW	1101	Bead Damage from Rim Flange Wear
BO	1102	Bead Damage Due to Overload
TB	1103	Torn Beads
KB	1104	Kinked/Distorted Beads
BD	1105	Bead Deformation
BB	1106	Burned Beads
CD	1107	Bead Damage from Curbing
CS	1108	Reinforce/Chafer Separation
FC	1109	Lower Sidewall/Bead Area Flow Crack
Sidewall Area		
SC	1201	Spread/Damaged Cord
SS	1202	Sidewall Separation
SI	1203	Sidewall Separation Damage Induced
ST	1204	Sidewall Separation Due to Tread Puncture
SO	1205	Sidewall Separation Due to Bead Damage
BM	1206	Branding Damage
CU	1207	Cuts and Snags
OD	1208	Damage from Object Lodged Between Duals
AB	1209	Sidewall Abrasion/Scuff Damage
WE	1210	Weathering/Ozone Cracking
RS	1211	Radial Split
SB	1212	Sidewall Bumps (Blisters)
DC	1213	Diagonal Cracking
HS	1214	Heavy Sidewall Splice
OZ	1215	Open Sidewall Splice
SP	1216	Sidewall Penetration
CW	1217	Crack at Edge of Retread Wing
CB	1218	Cracking Due to Excessive Sidewall Buff
ZP	1219	Circumferential Fatigue Rupture (Zipper)
Crown Area		
BS	1301	Brake Skid Damage
WW	1302	Wild Wire
DL	1303	Delamination
LB	1304	Lug Base Cracking
CC	1305	Chipping/Flaking/Chunking Tread
DR	1306	Stone Drilling
RD	1307	Regrooving Damage
DD	1308	Dynamometer Type Damage
EX	1309	Excessive Wear
RT	1310	Rib Tearing

Code (Alpha)	Code (Numeric)	Description
Crown Area (continues)		
DG	1311	Defense Groove Tearing
GC	1312	Groove Cracking
SD	1313	Spin Damage
ED	1314	Electrical Discharge
PO	1315	Tread Surface Porosity
TN	1316	Tread Non-fill
BL	1317	Belt Lift/Separation
BE	1318	Belt Separation - Repair Related
TS	1319	Tread Lift/Separation
RE	1320	Retread Separation
TR	1321	Retread Separation - Repair Related
TE	1322	Retread Edge Lifting
BP	1323	Bond Line Porosity
MP	1324	Missed Puncture
SF	1325	Skive Failure
WL	1326	Wing Lift
MT	1327	Misaligned Tread
IT	1328	Improper Tread Width
TC	1329	Tread Chunking at Splice
OT	1330	Open Tread Splice
SH	1331	Short Tread Splice
BT	1332	Buckled Tread
Tire Interior		
LP	1401	Inner Liner Split at Puncture
FO	1402	Foreign Object Inner Liner Damage
PS	1403	Pinch Shock
MD	1401	Tearing Mount/Demount Damage
OL	1405	Open Inner Liner Splice
LS	1406	Inner Liner Bubbles/Blisters/Separations
LC	1407	Inner Liner Cracking
PC	1408	Pulled/Loose Cords
TI	1409	Thin Inner Liner
PG	1410	Ply Gap
Improper/Failed Repairs		
BA	1501	Improper Bead Repair
OW	1502	On-the-Wheel Repair
BZ	1503	Improper Spot Repair
RB	1504	Repair Related Bulge
WR	1505	Spot Repair Should Have Been a Section
IR	1506	Improper Nail Hole Repair
IA	1507	Improperly Aligned Repair
BR	1508	Bridged Repair
IS	1509	Improper Section Repair - Damage Not Removed
BI	1510	Bias Repair in Radial Tire
IP	1511	Improper Repair Unit Placement
UN	1512	Unfilled Nail Hole Repair
RC	1513	Repair Unit Cracking at Reinforcement
FL	1514	Failed Inner Liner Repair
RU	1515	Repair Failure from Underinflation

RUNOUT AND VIBRATION DIAGNOSIS

Rotating assembly runout can influence vehicle vibration and contribute to irregular tire wear.

Following these procedures for verifying the concentricity of the guide rib area as well as ensuring that both radial and lateral runout measurements are the lowest possible will aid in reducing any tire/wheel/hub assembly contribution.

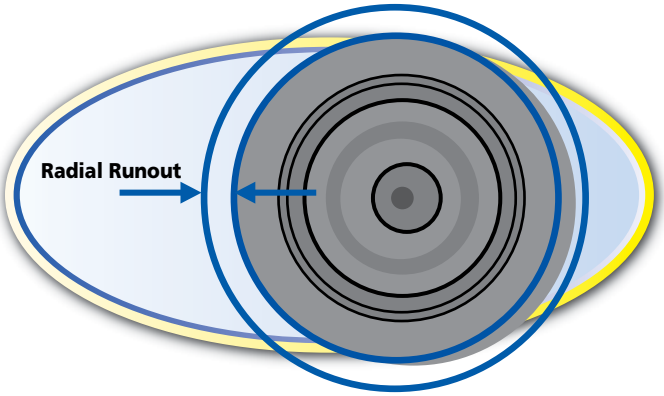

Tools needed:

- Tire runout gauge (or dial indicator)
- Pressure gauge
- Tread depth gauge
- Feeler gauge
- Six inch metal ruler
- Tire marking crayon
- Jack and jack stands

The first step is to eliminate possible sources of the disturbance (operation conditions, alignment posture, driveline component balance and angles, frame and chassis concerns, fifth wheel placement, and possible excessive stacked tolerances). Find out as much as you can that may be related to the issue to aid in the initial diagnosis (maintenance file, test drive, driver interview).

Examine the assemblies for proper pressure, proper mounting, verify balance if balanced, inspect for tire and or wheel damage. Verify torque and proper component assembly on tube-type or multi-piece assemblies. Proper mounting procedure will reduce runout where it starts during the mounting process.

Jack up the front end of the vehicle so axle is unloaded and place jack stands for support. Inspect front end components, including wheel bearing and kingpin play, suspension and rear assemblies.

Use the tire runout gauge to check for both radial (top photo) and lateral runout (bottom photo) for the rotating assembly. Values over 0.060 inch will be a detectable cause of vibration in steer assemblies and on recreational vehicles. Current TMC (Technology & Maintenance Council) assembly tolerances are **0.080 inches**, radial and lateral. See Page 58 for more information on Balance and Runout.

If the value is between 0.001 inch and 0.060 inch, continue with procedures below. If the value is > 0.060 inch, remove and deflate the tire, break it loose from the wheel, lubricate, rotate the tire 180 degrees, reinflate, and recheck runout.

Measuring Radial Runout on Center Rib

Measuring Lateral Runout on Outside Shoulder

Incorrect bead seating can occur on one or both bead seats. This usually results in a high radial and/or lateral reading. General cause is improper mounting procedures or wheel is at tolerance limits. It may require taking 3 radial readings to detect: outside shoulder, center rib, and inside shoulder.

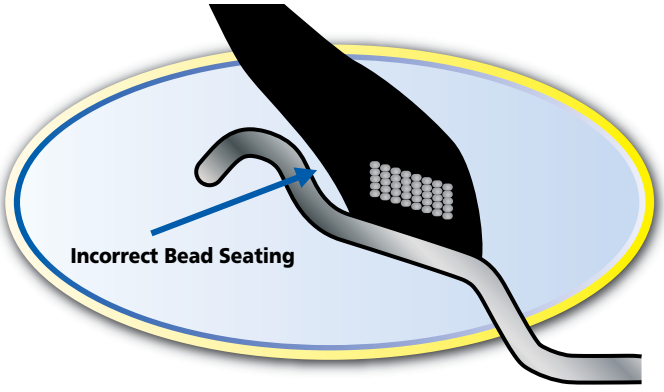

Note: The bead seating surface of the tire and wheel do not match up as shown in previous illustration. This incorrect seating is the result of mismount. The TMC (Technology & Maintenance Council) specification is **2/32nds (0.062 inch)**. If both wheel and tire are lubricated and initial inflation is done with the tire flat, then 1/32nd inch or less variance around the tire should be obtainable.

Check for this mismount condition with the 6 inch ruler, measuring in 4 locations around an unladen assembly.

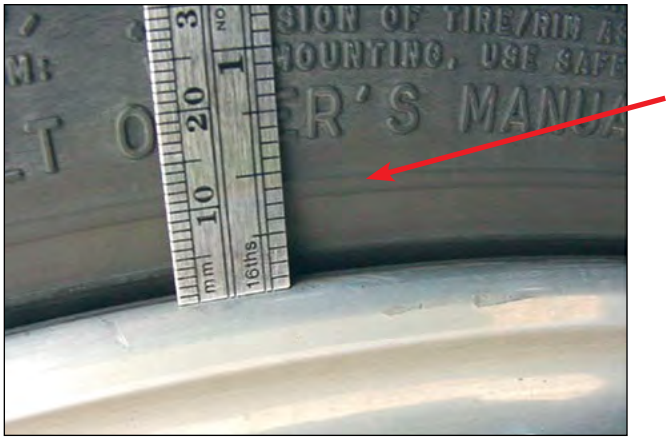

Check for hub to wheel clearance on hub piloted assemblies with the feeler gauge. If the measured high spot lines up with the feeler gauge gap, rotate the assembly so the gap is at the top, loosen the lug nuts, and allow gravity to center the wheel on the hub. Hand tighten the top nut, tighten all nuts in the proper sequence, recheck for runout, and retorque.

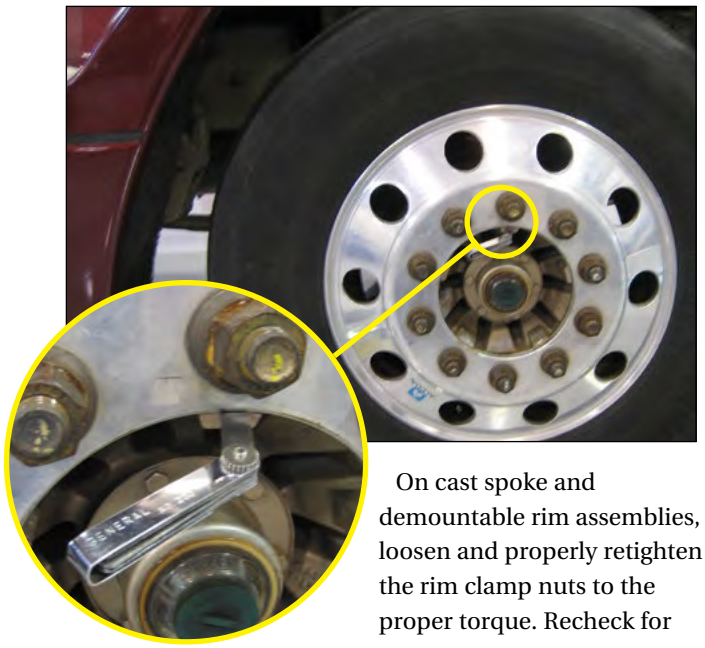

On cast spoke and demountable rim assemblies, loosen and properly retighten the rim clamp nuts to the proper torque. Recheck for runout.

Verification of radial (top photo) and lateral (bottom photo) wheel runout is another step to be considered. TMC tolerances are **0.070 inch** on tubeless steel disc wheels and **0.030 inch** on tubeless aluminum disc wheels.

PROCEDURE TO CHECK THE WHEEL FOR RADIAL AND LATERAL RUNOUT

- Mark two studs and the wheel with a crayon.
- Remove the tire and wheel assembly from the hub.
- Mark the tire and wheel at the valve stem.
- Dismount the tire from the wheel using proper procedures.
- Clean the wheel flange area with a wire brush. Check the wheel for any damage.
- Identify and mark the wheel to indicate where the radial and lateral high and low spots were found on the tire.
- Place the wheel back on the marked hub with the wheel matched to the marked studs. Use 3 lug nuts and properly torque.
- Measure radial and lateral runout on the inside and outside flange.
- See if the readings match up to the tire.
- Readings greater than 0.030 inch for aluminum wheels and 0.070 inch on steel wheels indicate high runout.

VIBRATION

Tire-induced vibrations are generally the result of out-of-round assemblies. Common causes for out-of-round assemblies are components such as wheels, drums, and hubs and are corrected by changing the individual component. The most common cause stems from mismount or improper mounting procedures that lead to the tire not seating concentrically with the wheel. Whether it's an individual component part or a mounting issue, these problems can be identified easily by checking for radial and lateral runout.

Radial Runout

NOTE: A piece of duct tape wrapped around the tread will facilitate measuring radial runout on block style drive tread designs.

Lateral Runout

Specifications for MICHELIN® X One® tires: See *TMC RP 214D, Tire/Wheel End Balance and Runout* for more details on radial and lateral runout readings.

Radial Runout < 0.125 inch
Lateral Runout < 0.125 inch

14" x 22.5 Aluminum Wheels < 0.030 inch
14" x 22.5 Steel Wheels < 0.070 inch

Tools Required: Truck style runout gauge stand with dial indicator.

BALANCE

The Technology Maintenance Council (TMC) has specifications for balancing.

Specifications for MICHELIN® X One® tires: See *TMC RP 214D, Tire/Wheel End Balance and Runout, Appendix B* for more details on balance.

Steer: 24 oz
Drive: 28 oz
Trailer: 28 oz

Tools Required: A static or dynamic wheel balancer and adapters to accommodate the larger MICHELIN® X One® tire and wheel assembly.

When troubleshooting a ride disturbance, it is standard practice to check the balance. Due to the major impact runout has on balance, it is recommended that radial and lateral runout are checked prior to attempting to balance the assembly.

SERVICING MULTI-PIECE & SINGLE PIECE RIM/WHEELS

OSHA REGULATION: 1910.177 SERVICING MULTI-PIECE AND SINGLE PIECE RIM/WHEELS

(a) Scope. (1) This section applies to the servicing of multi-piece and single piece rim/wheels used on large vehicles such as trucks, tractors, trailers, buses, and off-road machines. It does not apply to the servicing of rim/wheels used on automobiles, or on pickup trucks and vans utilizing automobile tires or truck tires designated ''LT.''

(2) This section does not apply to employers and places of employment regulated under the Construction Safety Standards, 29 CFR* part 1926; the Agriculture Standards, 29 CFR part 1928; the Shipyard Standards, 29 CFR part 1915; or the Longshoring Standards, 29 CFR part 1918.

(3) All provisions of this section apply to the servicing of both single piece rim/wheels and multi-piece rim/wheels unless designated otherwise.

(b) *Definitions. Barrier* means a fence, wall, or other structure or object placed between a single piece rim/wheel and an employee during tire inflation, to contain the rim/wheel components in the event of the sudden release of the contained air of the single piece rim/wheel.

Charts means the U.S. Department of Labor, Occupational Safety and Health Administration publications entitled ''Demounting and Mounting Procedures for Truck/Bus Tires'' and ''Multipiece Rim Matching Chart,'' the National Highway Traffic Safety Administration (NHTSA) publications entitled ''Demounting and Mounting Procedures Truck/Bus Tires'' and ''Multipiece Rim Matching Chart,'' or any other poster which contains at least the same instructions, safety precautions, and other information contained in the charts that is applicable to the types of wheels being serviced.

Installing a rim/wheel means the transfer and attachment of an assembled rim/wheel onto a vehicle axle hub. *Removing* means the opposite of installing.

Mounting a tire means the assembly or putting together of the wheel and tire components to form a rim/wheel, including inflation. Demounting means the opposite of mounting.

Multi-piece rim/wheel means the assemblage of a multi-piece wheel with the tire tube and other components. Multi-piece wheel means a vehicle wheel consisting of two or more parts, one of which is a side or locking ring designed to hold the tire on the wheel by interlocking components when the tire is inflated.

Restraining device means an apparatus such as a cage, rack, assemblage of bars and other components that will constrain all rim/wheel components during an explosive separation of a multi-piece rim/wheel, or during the sudden release of the contained air of a single piece rim/wheel.

Rim manual means a publication containing instructions from the manufacturer or other qualified organization for correct mounting, demounting, maintenance, and safety precautions peculiar to the type of wheel being serviced.

Rim/wheel means an assemblage of tire, tube and liner (where appropriate), and wheel components.

Service or servicing means the mounting and demounting of rim/wheels and related activities such as inflating, deflating, installing, removing, and handling.

Service area means that part of an employer's premises used for the servicing of rim/wheels or any other place where an employee services rim/wheels.

Single piece rim/wheel means the assemblage of single piece rim/wheel with the tire and other components.

Single piece wheel means a vehicle wheel consisting of one part, designed to hold the tire on the wheel when the tire is inflated.

Trajectory means any potential path or route that a rim/wheel component may travel during an explosive separation, or the sudden release of the pressurized air, or an area at which an airblast from a single piece rim/wheel may be released. The trajectory may deviate from paths which are perpendicular to the assembled position of the rim/wheel at the time of separation or explosion.

Wheel means that portion of a rim/wheel which provides the method of attachment of the assembly to the axle of a vehicle and also provides the means to contain the inflated portion of the assembly (i.e., the tire and/or tube).

(c) *Employee training.* (1) The employer shall provide a program to train all employees who service rim/wheels in the hazards involved in servicing those rim/wheels and the safety procedures to be followed.

(i) The employer shall assure that no employee services any rim/wheel unless the employee has been trained and instructed in correct procedures of servicing the type of wheel being serviced, and in the safe operating procedures described in paragraphs (f) and (g) of this section.

(ii) Information to be used in the training program shall include, at a minimum, the applicable data contained in the charts (rim manuals), and the contents of this standard.

(iii) Where an employer knows or has reason to believe that any of his employees is unable to read and understand the charts or rim manual, the employer shall assure that the employee is instructed concerning the contents of the charts and rim manual in a manner which

*29 CFR – Title 29, Labor; Code of Federal Regulations

the employee is able to understand.

(2) The employer shall assure that each employee demonstrates and maintains the ability to service rim/wheels safely, including performance of the following tasks:

(i) Demounting of tires (including deflation);

(ii) Inspection and identification of the rim/wheel components;

(iii) Mounting of tires (including inflation with a restraining device or other safeguard required by this section);

(iv) Use of the restraining device or barrier and other equipment required by this section;

(v) Handling of rim/wheels;

(vi) Inflation of the tire when a single piece rim/wheel is mounted on a vehicle;

(vii) An understanding of the necessity of standing outside the trajectory both during inflation of the tire and during inspection of the rim/wheel following inflation; and

(viii) Installation and removal of rim/wheels.

(3) The employer shall evaluate each employee's ability to perform these tasks and to service rim/wheels safely, and shall provide additional training as necessary to assure that each employee maintains his or her proficiency.

(d) *Tire servicing equipment.* (1) The employer shall furnish a restraining device for inflating tires on multi-piece wheels.

(2) The employer shall provide a restraining device or barrier for inflating tires on single piece wheels unless the rim/wheel will be bolted onto a vehicle during inflation.

(3) Restraining devices and barriers shall comply with the following requirements:

(i) Each restraining device or barrier shall have the capacity to withstand the maximum force that would be transferred to it during a rim/wheel separation occurring at 150 percent of the maximum tire specification pressure for the type of rim/wheel being serviced.

(ii) Restraining devices and barriers shall be capable of preventing the rim/wheel components from being thrown outside or beyond the device or barrier for any rim/wheel positioned within or behind the device;

(iii) Restraining devices and barriers shall be visually inspected prior to each day's use and after any separation of the rim/wheel components or sudden release of contained air. Any restraining device or barrier exhibiting damage such as the following defects shall be immediately removed from service:

(A) Cracks at welds;

(B) Cracked or broken components;

(C) Bent or sprung components caused by mishandling, abuse, tire explosion or rim/wheel separation;

(D) Pitting of components due to corrosion; or

(E) Other structural damage which would decrease its effectiveness.

(iv) Restraining devices or barriers removed from service shall not be returned to service until they are repaired and reinspected. Restraining devices or barriers requiring structural repair such as component replacement or rewelding shall not be returned to service until they are certified by either the manufacturer or a Registered Professional Engineer as meeting the strength requirements of paragraph (d)(3)(i) of this section.

(4) The employer shall furnish and assure that an air line assembly consisting of the following components be used for inflating tires:

(i) A clip-on chuck;

(ii) An in-line valve with a pressure gauge or a presettable regulator; and

(iii) A sufficient length of hose between the clip-on chuck and the in-line valve (if one is used) to allow the employee to stand outside the trajectory.

(5) Current charts or rim manuals containing instructions for the type of wheels being serviced shall be available in the service area.

(6) The employer shall furnish and assure that only tools recommended in the rim manual for the type of wheel being serviced are used to service rim/wheels.

(e) *Wheel component acceptability.* (1) Multi-piece wheel components shall not be interchanged except as provided in the charts or in the applicable rim manual.

(2) Multi-piece wheel components and single piece wheels shall be inspected prior to assembly. Any wheel or wheel component which is bent out of shape, pitted from corrosion, broken, or cracked shall not be used and shall be marked or tagged unserviceable and removed from the service area. Damaged or leaky valves shall be replaced.

(3) Rim flanges, rim gutters, rings, bead seating surfaces, and the bead areas of tires shall be free of any dirt, surface rust, scale or loose or flaked rubber build-up prior to mounting and inflation.

(4) The size (bead diameter and tire/wheel widths) and type of both the tire and the wheel shall be checked for compatibility prior to assembly of the rim/wheel.

(f) *Safe operating procedure—multi-piece rim/wheels.* The employer shall establish a safe operating procedure for servicing multi-piece rim/wheels and shall assure that employees are instructed in and follow that procedure. The procedure shall include at least the following elements:

(1) Tires shall be completely deflated before demounting by removal of the valve core.

(2) Tires shall be completely deflated by removing the valve core before a rim/wheel is removed from the axle in either of the following situations:

(i) When the tire has been driven underinflated at 80% or less of its recommended pressure, or

(ii) When there is obvious or suspected damage to the tire or wheel components.

(3) Rubber lubricant shall be applied to bead and rim mating surfaces during assembly of the wheel and inflation of the tire, unless the tire or wheel manufacturer recommends against it.

(4) If a tire on a vehicle is underinflated but has more than 80% of the recommended pressure, the tire may be inflated while the rim/wheel is on the vehicle, provided remote control inflation equipment is used and no employees remain in the trajectory during inflation.

(5) Tires shall be inflated outside a restraining device only to a pressure sufficient to force the tire bead onto the rim ledge and create an airtight seal with the tire and bead.

(6) Whenever a rim/wheel is in a restraining device the employee shall not rest or lean any part of his body or equipment on or against the restraining device.

(7) After tire inflation, the tire and wheel components shall be inspected while still within the restraining device to make sure that they are properly seated and locked. If further adjustment to the tire or wheel components is necessary, the tire shall be deflated by removal of the valve core before the adjustment is made.

(8) No attempt shall be made to correct the seating of side and lock rings by hammering, striking, or forcing the components while the tire is pressurized.

(9) Cracked, broken, bent, or otherwise damaged rim components shall not be reworked, welded, brazed, or otherwise heated.

(10) Whenever multi-piece rim/wheels are being handled, employees shall stay out of the trajectory unless the employer can demonstrate that performance of the servicing makes the employee's presence in the trajectory necessary.

(11) No heat shall be applied to a multi-piece wheel or wheel component.

(g) *Safe operating procedure—single piece rim/wheels.* The employer shall establish a safe operating procedure for servicing single piece rim/wheels and shall assure that employees are instructed in and follow that procedure. The procedure shall include at least the following elements:

(1) Tires shall be completely deflated by removal of the valve core before demounting.

(2) Mounting and demounting of the tire shall be done only from the narrow ledge side of the wheel. Care shall be taken to avoid damaging the tire beads while mounting tires on wheels. Tires shall be mounted only on compatible wheels of matching bead diameter and width.

(3) Nonflammable rubber lubricant shall be applied to bead and wheel mating surfaces before assembly of the rim/wheel, unless the tire or wheel manufacturer recommends against the use of any rubber lubricant.

(4) If a tire changing machine is used, the tire shall be inflated only to the minimum pressure necessary to force the tire bead onto the rim ledge while on the tire changing machine.

(5) If a bead expander is used, it shall be removed before the valve core is installed and as soon as the rim/wheel becomes airtight (the tire bead slips onto the bead seat).

(6) Tires may be inflated only when contained within a restraining device, positioned behind a barrier, or bolted on the vehicle with the lug nuts fully tightened.

(7) Tires shall not be inflated when any flat, solid surface is in the trajectory and within one foot of the sidewall.

(8) Employees shall stay out of the trajectory when inflating a tire.

(9) Tires shall not be inflated to more than the inflation pressure stamped in the sidewall unless a higher pressure is recommended by the manufacturer.

(10) Tires shall not be inflated above the maximum pressure recommended by the manufacturer to seat the tire bead firmly against the rim flange.

(11) No heat shall be applied to a single piece wheel.

(12) Cracked, broken, bent, or otherwise damaged wheels shall not be reworked, welded, brazed, or otherwise heated.

Reprints of the charts are available through the Occupational Safety and Health Administration (OSHA) Area and Regional Offices. The address and telephone number of the nearest OSHA office can be obtained by looking in the local telephone directory under U.S. Government, U.S. Department of Labor, Occupational Safety and Health Administration.

Single copies are available without charge. Individuals, establishments and other organizations desiring single or multiple copies of these charts may order them from the OSHA Publications Office, U.S. Department of Labor, Room N–3101, Washington, DC 20210, Telephone (202) 219–4667.
[49 FR 4350, Feb. 3, 1984, as amended at 52 FR 36026, Sept. 25, 1987; 53 FR 34737, Sept. 8, 1988; 61 FR 9239, Mar. 7, 1996].

REGROOVING

Only MICHELIN® truck tires that are marked "REGROOVABLE" on the sidewall may be regrooved. After regrooving, you must have at least 3/32" of under tread covering the top ply. If steel is exposed, the tire must be scrapped or retreaded. In addition, some tread designs will have a regrooving depth indicator as shown below. Do not regroove below the depth of the indicator. Regrooving depth indicators are holes (of 4 mm depth) situated on the treadwear indicator to indicate the recommended regrooving depth for these tires.

It is the responsibility of the regroover to assure that all Federal Regulations are met. See US Code of Federal Regulations: Title 49, Transportation; Parts 569 and 393.75.

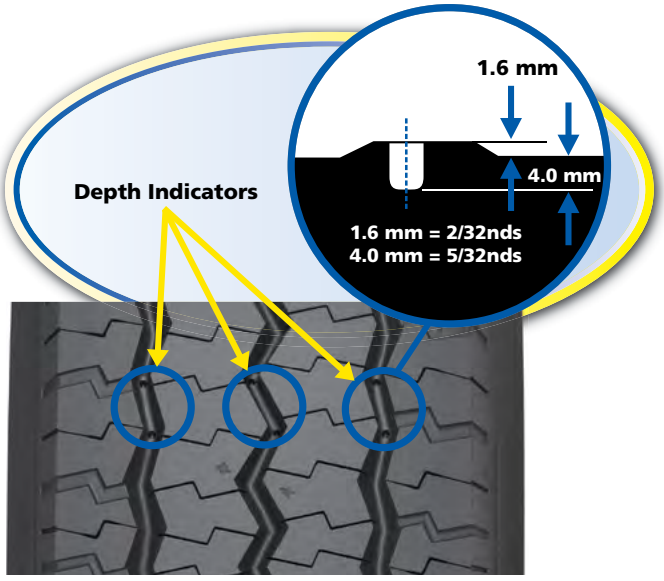

One of the regulations governing regrooving tires requires that a regrooved tire must have a minimum of 90 linear inches of tread edge per linear foot of the circumference.

The MICHELIN® XZU®2 tire has only 3 circumferential tread grooves. To meet the 569.7 (iii) requirement, additional lateral grooves must be added as shown below.

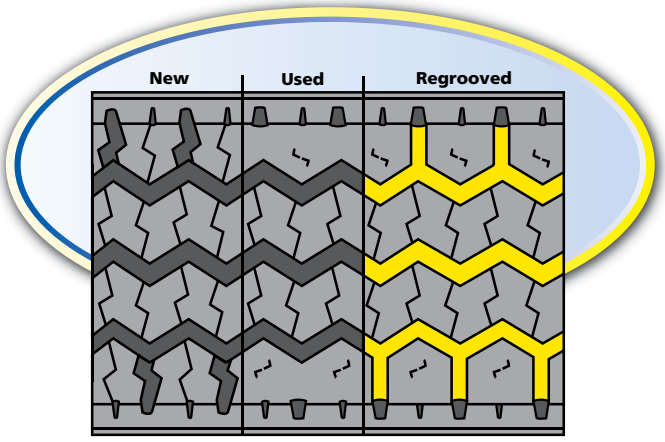

REGROOVING CODE

U. S. CODE OF FEDERAL REGULATIONS: TITLE 49, TRANSPORTATION; PARTS 569.7 AND 393.75 (EXTRACTS)

For complete regulations, go to: ecfr.gpoaccess.gov

569.7 REQUIREMENTS.

(a) *Regrooved tires.* (1) Except as permitted by paragraph (a)(2) of this section, no person shall sell, offer for sale, or introduce or deliver for introduction into interstate commerce regrooved tires produced by removing rubber from the surface of a worn tire tread to generate a new tread pattern. Any person who regrooves tires and leases them to owners or operators of motor vehicles and any person who regrooves his own tires for use on motor vehicles is considered to be a person delivering for introduction into interstate commerce within the meaning of this part.

(2) A regrooved tire may be sold, offered for sale, or introduced for sale or delivered for introduction into interstate commerce only if it conforms to each of the following requirements:

(i) The tire being regrooved shall be a regroovable tire;

(ii) After regrooving, cord material below the grooves shall have a protective covering of tread material at least 3/32-inch thick;

(iii) After regrooving, the new grooves generated into the tread material and any residual original molded tread groove which is at or below the new regrooved depth shall have a minimum of 90 linear inches of tread edges per linear foot of the circumference;

(iv) After regrooving, the new groove width generated into the tread material shall be a minimum of 3/16-inch and a maximum of 5/16-inch;

(v) After regrooving, all new grooves cut into the tread shall provide unobstructed fluid escape passages; and

(vi) After regrooving, the tire shall not contain any of the following defects, as determined by a visual examination of the tire either mounted on the rim, or dismounted, whichever is applicable:

(A) Cracking which extends to the fabric,

(B) Groove cracks or wear extending to the fabric, or

(C) Evidence of ply, tread, or sidewall separation;

(vii) If the tire is siped by cutting the tread surface without removing rubber, the tire cord material shall not be damaged as a result of the siping process, and no sipe shall be deeper than the original or retread groove depth.

(b) *Siped regroovable tires.* No person shall sell, offer for sale, or introduce for sale or deliver for introduction into interstate commerce a regroovable tire that has been siped by cutting the tread surface without removing rubber if the tire cord material is damaged as a result of the siping process, or if the tire is siped deeper than the original or retread groove depth.

393.75 TIRES.

(a) No motor vehicle shall be operated on any tire that –

(1) Has body ply or belt material exposed through the tread or sidewall,

(2) Has any tread or sidewall separation,

(3) Is flat or has an audible leak, or

(4) Has a cut to the extent that the ply or belt material is exposed.

(b) Any tire on the front wheels of a bus, truck, or truck tractor shall have a tread groove pattern depth of at least 4/32 of an inch when measured at any point on a major tread groove. The measurements shall not be made where tie bars, humps, or fillets are located.

(c) Except as provided in paragraph (b) of this section, tires shall have a tread groove pattern depth of at least 2/32 of an inch when measured in a major tread groove. The measurement shall not be made where tie bars, humps or fillets are located.

(d) No bus shall be operated with regrooved, recapped or retreaded tires on the front wheels.

(e) A regrooved tire with a load-carrying capacity equal to or greater than 2,232 kg (4,920 pounds) shall not be used on the front wheels of any truck or truck tractor.

TRANSIT APPLICATIONS IN URBAN CONDITIONS

Transit applications in Urban conditions may experience sidewall abrasion damage from rubbing the tire's sidewall along a curb. This damage is primarily found on the right side of the vehicle on the front and rear positions. MICHELIN® X® INCITY™ Z and XZU®3 transit tires are designed to operate in these conditions and offer additional sidewall protection in these situations. The Urban tires also have a molded sidewall depth indicator to assist in knowing how deep the tire can wear before rotating away from that scrub position.

NOTE: Not all tire sidewall depth indicators are located along the same plane in the sidewall.

MICHELIN® X® INCITY™ Z TIRE

The MICHELIN® X® INCITY™ Z tire has sidewall depth indicators at 4 identical locations. Therefore, if very little or no sidewall depth indicator is visible on the MICHELIN® X® INCITY™ Z tire it is time to rotate sidewalls.

MICHELIN® XZU®3 TIRE

The MICHELIN® XZU®3 tire has the depth indicators in opposite placement at 2 different heights. There are 4 sidewall depth indicators located at 2 different positions on each sidewall with a depth of 6 mm. The indicators are diametrically opposite each other on the same side. When two of the depth indicators wear down to the point that they disappear the tire needs to be rotated with that sidewall away from the curb.

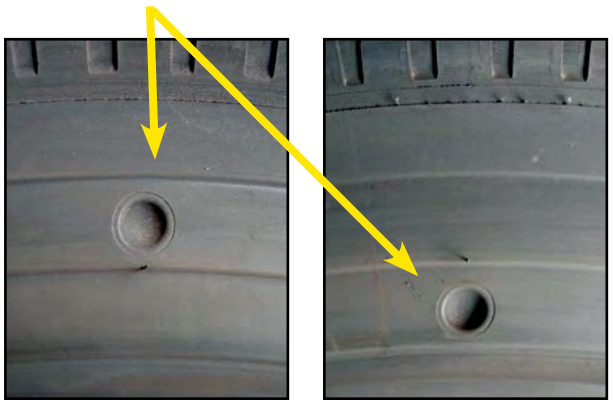

If no sidewall depth indicator is available and the product you are using it is not maximized for urban use the tire should accept some lighter levels of tire curbing. When the sidewall writing and beauty rings are worn off it is time to rotate sidewalls.

Prior to rotating the tire sidewall, the sidewall should be examined to make sure there are no cords exposed or cuts deeper than 3 mm. If these conditions exist, the tire should be removed and scrapped.

New Sidewall Depth Indicators

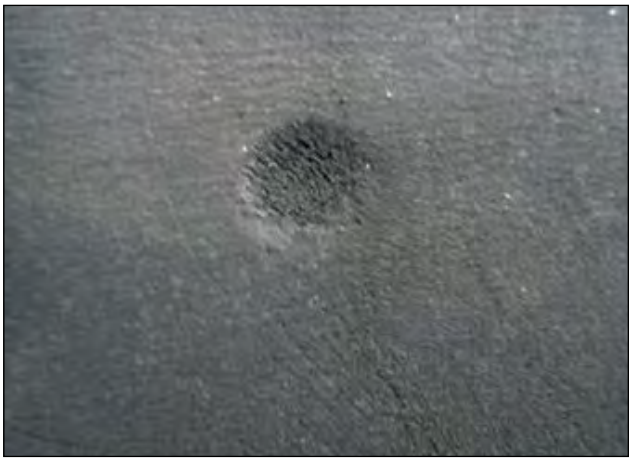

Worn Sidewall Depth Indicators

"THE CRITICAL 6"

FACTORS THAT COST FLEETS MONEY

Overall Goal: Maintain all tires at the fleet target inflation pressure based on the manufacturers' application data book for the particular axle load. When monitoring inflation pressure well maintained fleets deep the tires within 5 psi of this setting, and not more than 5 psi different than the dual tire next to it in operation.

1. Low Inflation Pressure

Under-inflation is the biggest issue in the industry. It is the number one cause of premature tire removal. With the advancement in today's radial casing, it is virtually impossible to determine if a tire is properly inflated without using a pressure gauge. Periodically calibrate the gauges using a master gauge. Over time, usage conditions can cause a pressure gauge to loose accuracy beyond the 2 psi manufactures tolerance range. The time and effort required to verify gauges and to check tire pressure is time well spent.

Goal: Maintain all tires at the fleet target inflation pressure based on the manufacturers' application data book for the particular axle load.

Effect: An inflation pressure mismatch of greater than five psi will result in the two tires of a dual assembly being significantly different in circumference resulting in irregular wear and can also lead to eventual tire loss due to premature casing fatigue. A difference of five psi between steer tires will cause the vehicle to pull to the side with the lower pressure. Additionally, under inflation results in internal tire heat build up and potentially premature tire failure.

2. High Inflation Pressure

Over inflated tires increase the likelihood of crown cuts, impact breaks, punctures, and shock damage resulting from the decrease of sidewall flexing and an increase in firmness of the tread surface.

Goal: Maintain all tires at the fleet target inflation pressure based on the manufacturers' application data book for the particular axle load.

Effect: Increases the probability of potential casing damage. This change in contact patch footprint could result in a reduction of traction and tread life.

3. Missing Valve Caps

Missing valve caps are a primary source of low inflation pressure. Valve caps are used to keep debris out of the core and act as a secondary air seal if the valve core happens to leak. Verify there is a good tight seal by use of a spray type leak detector. A good "metal" cap with a rubber seal will hold tire pressure without a valve core.

Goal: Install suitable valve caps on all wheel positions. Consider the use of inflate-thru valve caps for easier pressure maintenance.

Effect: The number one cause of tire pressure loss can be attributed to missing valve caps. Operating without valve caps can result in under inflation and the conditions mentioned above in 1 and 2.

4. Dual Mismatch Inflation Pressure

Dual mismatched pressures can cause a permanent irregular wear pattern to develop and within a few weeks can potentially be a cause of early tire removal. Dual mismatched pressure will also affect the matched tire, causing accelerated tread wear and casing fatigue.

Goal: Maintain all tires at the fleet target inflation pressure based on the manufacturers' application data book for the particular axle load. Well maintained fleets keep the tires within 5 psi of this setting when monitoring inflation pressure.

Effect: This irregular wear can result in early removal or require tire rotation to minimize the effect.

5. Dual Mismatch Height

Dual mismatch tread depths (tire height differences) will cause irregular wear. Additionally, the larger tire (the one with the greatest tread depth) will become over-fatigued due to bearing more weight, this accelerates premature casing failure.

Goal: Match tires in dual assembly with equal tread depths. Well maintained fleets use +/- 4/32" of tread depth as maximum allowable difference in overall height between the duals.

Effect: Dual mismatch tread depths can cause a permanent irregular wear pattern in a few weeks resulting in early removal or a lost casing.

6. Irregular Wear

Proper inflation pressure, correct toe settings and proper alignment can prevent most irregular wear. Steer, drive, and trailer axle alignment verification and/or correction can be performed with a minimal cost or investment in equipment.

Goal: Reduce irregular wear by proactive tire and vehicle maintenance programs.

Effect: Once a wear pattern develops, it will continue until the tire is rotated or removed to be retreaded or scrapped. Diagnosis and correction of the cause is part of the solution in preventing future conditions. Average occurrence of irregular wear typically results in a loss of tread life resulting in a much higher total cost of ownership.

PUBLICATIONS, VIDEOS, AND WEBSITES

Publications – Data Books:

BFGoodrich® Commercial Truck Tires Data Book BWL42029
MICHELIN® Agricultural Tire Data Book MUT41305
MICHELIN® Data Book (Passenger Tire and Light Truck Tire) MDL41780
MICHELIN® Earthmover and Industrial Data Book MEL40017
MICHELIN® Truck Tire Data Book: RV Tires, Commercial Light Truck Tires, Truck Tires and Retreads MWL40731
Uniroyal Truck Tire Data Book UWL10000

Publications – References:

Cage It Poster 24”x36” MWT43142
Crown/Sidewall Repair Template MWT40192
MICHELIN® Earthmover and Industrial Tire Reference Brochure MEL41736
MICHELIN® RV Tires MWL43146
MICHELIN® Truck Tire Nail Hole Repair Procedures MWT40163
Nail Hole Repair Poster 24”x36” MWT43210
The Usual Suspects Drive, Flyer MWT43661
The Usual Suspects Drive, Poster 24”x36” MWT43962
The Usual Suspects Steer, Flyer MWT43963
The Usual Suspects Steer, Poster 24”x36” MWT43964
The Usual Suspects Trailer, Flyer MWT43965
The Usual Suspects Trailer, Poster 24”x36” MWT43966

Publications – Warranties:

Agricultural Tires Limited Manufacturer’s Warranty (MICHELIN®/KLÉBER®) XUM41727
BFGoodrich® Truck Tire Operator’s Manual and Limited Warranty BMW40844
Earthmover Limited Tire Warranty MEE40022
Michelin Retread Technologies, Inc. National Limited Warranty MWW41268
MICHELIN® Truck Tire Operator’s Manual and Limited Warranty MWE40021
Passenger and Light Truck - MICHELIN® Complete Warranty MDW41156
Uniroyal Truck Tire Operator’s Manual and Limited Warranty UWW10000

Technical Bulletins: www.michelintruck.com

http://www.michelintruck.com/reference-materials/manuals-bulletins-and-warranties/

Videos:

http://www.michelintruck.com/reference-materials/videos/
http://www.bfgoodrichtrucktires.com/reference-materials/videos/

Websites:

www.michelintruck.com
www.michelinrvtires.com
www.bfgoodrichtrucktires.com
www.uniroyaltrucktires.com
www.michelinman.com

Industry Contacts And Publications:

OSHA (Occupational Safety and Health Administration) . . . . . www.osha.gov
- Safety Standard No. 29 Cfr, Part 1910.177

USTMA (U.S. Tire Manufacturers Association) - Formally RMA . . . . . www.ustires.org
- Care And Service of Truck and Light Truck Tires
- Inspection Procedures to Identify Potential Sidewall "Zipper Ruptures" in Steel Cord Radial Truck, Bus and Light Truck Tires (TISB 33, Number 6)

SAE (Society of Automotive Engineers) . . . . . www.sae.org

TIA (Tire Industry Association) . . . . . www.tireindustry.org
- Commercial Tire Service Manual

TMC (Technology & Maintenance Council) . . . . . www.trucking.org
- TMC RP 201D, Tire Flap and Rim Dimensions
- TMC RP 203D, Truck Tire Regrooving
- TMC RP 205B, Use of Tire Bead Lubricants
- TMC RP 206B, Tire Repair Procedures
- TMC RP 208E, Tire Cost Determination
- TMC RP 209E, Tire and Rim Safety Procedures
- TMC RP 210D, Radial Tire Construction Terminology
- TMC RP 211B, Rim and Wheel Selection and Maintenance
- TMC RP 212D, Industry Advisory for Retreading Truck and Bus Tires
- TMC RP 213E, RMA Truck Tire and Wheel-Related Publications
- TMC RP 214D, Tire/Wheel End Balance and Runout
- TMC RP 215D, Sources of Tire and Wheel Information
- TMC RP 216C, Radial Tire Conditions Analysis Guide
- TMC RP 217D, Attaching Hardware for Disc Wheels
- TMC RP 218E, DOT Tire Identification Codes
- TMC RP 219C, Radial Tire Wear Conditions and Causes (A Guide to Wear Pattern Analysis)
- TMC RP 220D, Tire Tread Design Selection
- TMC RP 221D, Retread Plant Inspection Guidelines
- TMC RP 222C, User's Guide to Wheels and Rims
- TMC RP 223D, Tire Selection Process
- TMC RP 224D, Tire Retread Process
- TMC RP 226C, Radial Tire Repair Identifier (Blue Triangle)
- TMC RP 228B, Guidelines for Tire Radio Frequency Tags and Readers
- TMC RP 229B, Computerized Tire Recordkeeping
- TMC RP 230B, Tire Test Procedures for Treadwear, Serviceability and Fuel Economy
- TMC RP 231, Wheel System Maintenance Labeling Guidelines
- TMC RP 232A, Zipper Rupture Inspection Procedures for Light- and Medium-Duty Truck Tires
- TMC RP 233B, Radial Tire Nail Hole Repair Training Guidelines
- TMC RP 234A, Proper Valve Hardware Selection Guidelines
- TMC RP 235, Guidelines for Tire Inflation Pressure Maintenance
- TMC RP 236A, Outsourcing Guidelines for Tire and Wheel Maintenance
- TMC RP 237A, Retorquing Guidelines for Disc Wheel
- TMC RP 238A, Troubleshooting Disc Wheel Looseness
- TMC RP 239A, Commercial Vehicle Tire Inflation and/or Monitoring Systems Guidelines
- TMC RP 240A, Steel Wheel and Rim Refinishing Guidelines
- TMC RP 241A, Tubeless Disc Wheel Inspection for Undersized Bead Seats
- TMC RP 242, Guidelines for Evaluating Tire and Wheel Related Products and Systems
- TMC RP 243, Tire and Wheel Match Mounting Markings
- TMC RP 244A, Bias Tire Conditions Analysis Guide
- TMC RP 245, Tire Assembly Balancing With Wheel Weights
- TMC RP 246, Consideration for Products Intended for Use Inside Tires
- TMC RP 247, Tire Radio Frequency Identification (RFID) Device Guidelines (Passive Tags) for Medium- and Heavy-Duty Truck Tires
- TMC RP 248, Guidelines for Tire Casing Data Marking in the Retread and/or Repair Process
- TMC RP 249, Safety Issues Related to the Use of Flammable Fluids During Tire Demounting
- TMC RP 250, Effects of Extreme Temperatures on Wheel Torque and Clamp Load
- TMC RP 251, Irregular Wear in Low-Profile Metric Wide-base Radial Tires Used in Trailer Service
- TMC RP 252, Troubleshooting Radial Tire Irregular Wear
- TMC RP 253, Usage Guidelines for Retreaded Steer Axle Tires
- TMC RP 254, Usage Guidelines for Repaired Steer Axle Tires
- TMC RP 608B, Brake Drums and Rotors
- TMC RP 631A, Recommendations for Wheel End Lubrication
- TMC RP 642B, Total Vehicle Alignment: Recommendations for Maximizing Tire and Alignment-Related Component Life
- TMC RP 643, Air-Ride Suspension Maintenance Guidelines
- TMC RP 645, Tie Rod End Inspection and Maintenance Procedure
- TMC RP 648, Troubleshooting Ride Complaints

TRIB (Tire Retread Information Bureau) . . . . . www.retread.org

TRA (The Tire and Rim Association, Inc.) . . . . . www.us-tra.org

TTMA (Truck Trailer Manufacturers Association) . . . . . www.ttmanet.org
- TTMA RP No. 17, Trailer Axle Alignment

INDEX

A

Ackerman Principle 66
Air Suspensions 78
AIRSTOP™ Tube 132
Alignment 63-69
  Camber 65
  Caster 65
  Recommended Alignment Targets 66
  Steer Axle Geometry 63
  Steer Axle Setback 66
  Tandem Axle Parallelism 64
  Thrust Angle (Tracking) 64
  Toe 63-64
  Toe-Out-On-Turns 66
Alignment Checks (Frequency) 66
Alignment Equipment 67
Alignment Field Method 67, 166-167
Alignment Targets (TMC Guidelines) 66
Aluminum Wheels 16
Ambient Temperature 9, 50
Application 4-5
  Commercial Light Truck 4
  MICHELIN® X One® Tire Applications 5
  Long Haul 4
  On/Off-Road 5
  Recreational Vehicle 4
  Regional 4
  Special Application Tires 5
  Urban 4
  4x2 Applications 93
Approximate Weight of Materials 161
Aspect Ratio 6
ATTACC Plus System (Field Alignment Method) 166-167
Automated Tire Inflation System (ATIS) 56
Axle Alignment 165
Axle and Wheel Ends - MICHELIN® X One® Tire 83-85
Axle Parallelism and Tracking 68-69
Axle Track Width 88

B

Balance and Runout 58
Bearings 89
Bias-Ply (Cross, Diagonal Ply) 131-142
BibAlignment System 67
Brake Heat 76-77, 96-99
Brake Lock 75-76
Braking Systems and Issues 75-77
Branding 62
Buff Radius 102-104
Buff Width 102
Buffing Specification Chart (Retread) 104

C

Camber 65, 71
Casing Management 168-169
Cast Spoke Wheel 18
Caster 65
Chains 60, 105
Clearances 46-47
  Front Wheel Clearances 47
  Lateral Clearances 46
  Longitudinal Clearances 47
  Vertical Clearances 47
Cold Climate Pressure Correction Data 169
Commercial Vehicle Safety Alliance (CVSA) 130
Comparative Sizes 6, 133
Components and Materials 30, 136
Contact Area/Footprint 53
Conversion Table 160
Cost Analysis 170
Cost Per Mile (CPM) 170
Critical Six Fundamentals 185
Cross (Bias) Ply 131-142
Cupping Wear 71

D

Damages (Radial/Crown) 143-158
Definitions 6, 9-10, 132
Demounting 41-42
  MICHELIN® X One® Tire 102
  Tubeless 41-42
  Tube-Type 141-142
Diagonal (Bias) Ply 131-142
Diagonal Wear 73
Diesel Fuel Contamination 59
Directional Tires 8
Disc Wheel Installation 20
Do Not Overload 57
DOT Sidewall Markings 7, 9
Drive at Proper Speeds . . . . . 57 , 117
Drive Carefully 56, 117
Drop Center 22
Dual Assembly 45-48
Dual Mismatch 185
Dual Spacing/Measuring 6, 45, 116
Dynamometers 61, 120

E

Effect and Cause – Tire Damage 145-158
  Air Infiltration 148-149
  Bead Damages 155
  Fatigue Related Damage 154
  Impact Damage 153
  Pinch Shock 152
  Repairs and Retreading Conditions 156-157
  Run-flat 146-147
  Scrap Inspection Form 158
Engine Computers / Fuel Economy 90
Extending Tire Life 49-80

INDEX

F

Factors Affecting Tread Life/Tread Wear 63-69
Fasteners for MICHELIN® X One® Tires 25
Fatigue Rupture (Zipper) 120
Field Alignment Checks 67
Fifth Wheel 78
Flap Code 132, 135
Flat Spots 72, 75
Flood Damage 59
Footprint 53
Free Radius 6-7
Free Rolling Wear 70
Fuel Efficiency/Saving/Analysis 171
Fuel Analysis 171

G

GAWR (Gross Axle Weight Rating) 14, 57, 95, 114, 121-123
Gear Ratio 45, 105
General Information 160-163
- Approximate Weight of Materials 161
- Conversion Table (Standard - Metric - Degrees) 163
- Load Index 162
- Load Range/Ply Rating 160
- Pressure Unit Conversion 160
- Speed Symbol 163
- Units of Measurement 160

GCW (Gross Combination Weight) 14, 122-123
GCWR (Gross Combined Weight Rating) 114, 121-123
Guide Rib 44
GVW (Gross Vehicle Weight) 13, 121-123
GVWR (Gross Vehicle Weight Rating) 121-123

H

Heat Study 96-99
Hub Piloted Disc Wheels 17
Hydroplaning 108

I

In-Service Alignment Recommendations 66
Inflation and Pressure Monitoring Systems 90-91
Inflation Safety Recommendations 30, 136
Inspections 29, 54, 66, 158
Installation 45

L

Lateral Clearance - MICHELIN® X One® Tires 95
Legal Limits 47
Load Index 162
Load per Inch Width Law 57
Load Range/Ply Rating 160
Load Ratings 85
Loaded Radius 6-7
Loads Per Axle 9
Lubrication 31, 137

J

Jack-Knife 110

M

Maintaining the Tire 50-58
Maintaining the Vehicle 63-80
Material Weights 161
Matching Pressures 170
Matching Tires 45, 48, 168
Michelin Retread Technologies (MRT) 102-104, 130
MICHELIN® X One® Tire 81-106
Minimum Dual Spacing 6, 152
Mismount 43
Mounting Procedures 32-37, 138-140, 172
- MICHELIN® X One® Tire 32-34
- Tubeless 32-37
- Tube-Type 138-140
- 16.00R20 and 24R21 172
- 19.5” Mounting 35-36
  - Aluminum Wheels 35
  - Steel Wheels 36

N

Nail Hole Repair Manual 126-130
Nitrogen 52, 116
Nominal Wheel Diameter 6-7

O

OSHA (Occupational Safety and Health Administration)
- 1910.177 179-181

Offset/Outset-Dual/Front Wheels 46
Operation and Handling 107
Out-of-Service Conditions 174-175
Outset Wheel - MICHELIN® X One® Tire 22, 88
Over-Steer 107
Overall Diameter/Width 47
Overall Vehicle Track and Width 87
Overinflation 51, 185

P

Ply Rating 160
Preparation of Wheels and Tires 31, 137
Pressure 40, 50-51, 94, 185
Pressure Coefficients 10-11, 134
Pressure Maintenance 50-58, 94, 114-116
Pressure Monitoring System 56, 116
Pressure Unit Conversion Table 160
Proper Pressure 51
Publications 186

INDEX

Q

Quick Checks for Suspension Faults 70-80
- Front Suspension Faults 80
- Rear Suspension Faults 79
- Trailer System Faults 79

Quick Reference Guide (Retreading) 130

R

Rapid Tire Pressure Loss Procedure 111
Recreational Vehicles 113-124
- Maintaining Recreational Vehicle Tires 114-120
- How to Weigh Recreational Vehicle 121-123

Regrooving 182-183
Regulations 112
Repairs 102-104, 125-129, 133
Repair Limit 126
Retreading 102-104, 130
Rims 9, 22-23
Rim Width 46
Rollover Threshold 109
Rotation 62
RPM (Engine Revolutions per Minute) 105
Runout 48, 58, 164, 176-177
Runout Diagnosis 58, 176-177

S

Safety Device/Cage 29, 30, 126, 136
Scrap Inspection Form 158
Sealants 54
Section Height 6
Sidewall Markings 9
Siping 62
Spare Wheel Rack 47
Special Tools for Mounting MICHELIN® X One® Tire 38-39
Speed Restrictions 10
Speed Symbol 63
Spinning 62
Specification Data Table 7, 94, 124
Spindles 86
Stacking of MICHELIN® X One® Tire 59
Static and Low Speed Load 11, 134
Steel Wheels 16
Steer Axle Geometry 63
Steer Axle Setback (Skew) 66
Storage 59, 117, 137
Stud Piloted Disc Wheels 17
Summary of Tire Conditions Due to Brakes 75
Suspensions 78
Suspension Fault 79-80

T

TRA (The Tire & Rim Association, Inc.) Standards . . . 10, 11, 134
Tandem Axle Parallelism 64
Tandem Axles 45, 64, 68-69, 165, 167
Tech Identification (Blue) Triangle 130
Thermal Equilibrium 50
Thrust Angle 64
Tire Damage – Effect & Cause 143-158
- Air Infiltration 148-151
- Bead Damages 155
- Fatigue Related Damage 154
- Impact Damage 153
- Non Compliant Run Flat/Bead Lock Devices 60
- Pinch Shock 152
- Repairs and Retreading Conditions 156-157
- Run-flat 146-147
- Scrap Inspection Form 158

Tire Deflection 6-7
Tire Inspection 29, 54-55
Tire Mixing 48
Tire Pressure Monitoring System (TPMS) 56
Tire Repairs 115
Tire Revolutions Per Mile (Tire Revs./Mile) 6, 45, 105, 173
Tire Size Marking 6, 95, 133
- MICHELIN® X One® Tire 95
- Tubeless 6
- Tube-Type 133

Tire Wear 70-74
TMC Recommended Alignment Targets 66
Toe 63-64, 70
Toe Wear 70
- Camber Wear 71
- Cupping Wear 71
- Diagonal Wear 72
- Flat Spotting Wear 72
- Free Rolling Wear 70

Toe-Out-On-Turns 66
Torque Chart 19, 20-21
Transit Application in Urban Conditions 184
Tread Depth Measurements 56, 115
Tread Designs 3-5, 8
Tread Pattern Designations 2-3
Troubleshooting 79-80
Truck Tire Size Markings 6, 133
Tube Code 132, 135
Tubeless Tire 15-29
- Mounting 32-47
- Demounting 41-42
- Inflation 40

Tube-Type Tire 131-142
- Automatic Spreader 140
- Demounting 141-142
- Inflation 140
- Manual Spreader 140
- Mounting 138-140

INDEX

U

Under-Steer. 107
Underinflation 51, 114, 185
Undertread 102-103
Units of Measurement 160
Urban Tire Application. 4, 184
UVW (Unloaded Vehicle Weight) 114

V

Valve System (Cap, Core, and Stems) 23-25
Vehicle Alignment 63-69
Vehicle Track 87
Vehicle Types – Weight Class 13-14
Vibration Diagnosis. 124, 176-178
Videos. 186
VMRS Code List (Vehicle Maintenance
Reporting Standards 2000) 174-175

W

Wear Bars. 57, 115
Wear Patterns 70-74
Brake Skid. 74
Camber Wear. 71
Center Wear. 73
Cupping Wear 71
Diagonal Wear. 72
Flat Spotting Wear 72
Free Rolling Wear 70
Heal-Toe. 73
River Wear Only 73
Step-Shoulder/Localized Wear/Shoulder Cupping 74
Toe Wear. 70
Websites. 186
Weight Class – Vehicle Types 13-14
Weights of Materials 161
Wheel Bearing and Hub Inspection 78
Wheel Specifications - MICHELIN® X One® Tire 26
Wheels 9, 31, 16-22, 95, 179-181
Wheel Diameter 46

Z

Zipper Rupture. 2, 144, 120, 154

Notes

MICHELIN® Truck Tire Service Manual

To learn more please contact your Michelin Sales Representative or visit

www.michelintruck.com

To order more books, please call Promotional Fulfillment Center 1-800-859-0665

Monday through Friday, 8 a.m. to 8 p.m. Eastern Time

United States

Michelin North America, Inc.
One Parkway South
Greenville, SC 29615
1-888-622-2306

Canada

Michelin North America (Canada), Inc.
2500 Daniel Johnson, Suite 500
Laval, Quebec H7T 2P6
1-888-871-4444

Mexico

Industrias Michelin, S.A. de C.V.
Av. 5 de febrero No. 2113-A
Fracc. Industrial Benito Juarez
7 6120, Querétaro, Qro. Mexico
011 52 442 296 1600

An Equal Opportunity Employer
Copyright © 2017 Michelin North America, Inc. All rights reserved.
The Michelin Man is a registered trademark owned by Michelin North America, Inc.
MICHELIN® tires and tubes are subject to a continuous development program. Michelin North America, Inc. reserves the right to change product specifications at any time without notice or obligations.

MWL00120 (07/17) Revised 09/18 PDF Only $25.00 US