THE MICHELIN® X® MULTI HL Z TIRE

Designed to optimize durability and mileage performance in high load regional construction, bulk and tanker operations.

Line Haul	Regional	Urban	On/Off Road

Recommended Acceptable

* The wide arrow shows the recommended start-of-life mounting direction for optimal tread performance. The small arrow demonstrates the alternate rolling direction which may be used for the second half of tread life. Michelin recommends that all tires on the same axle have the arrows facing in the same direction.

THE MICHELIN® X® MULTI HL Z TIRE

Designed to optimize durability and mileage performance in high load regional construction, bulk and tanker operations.

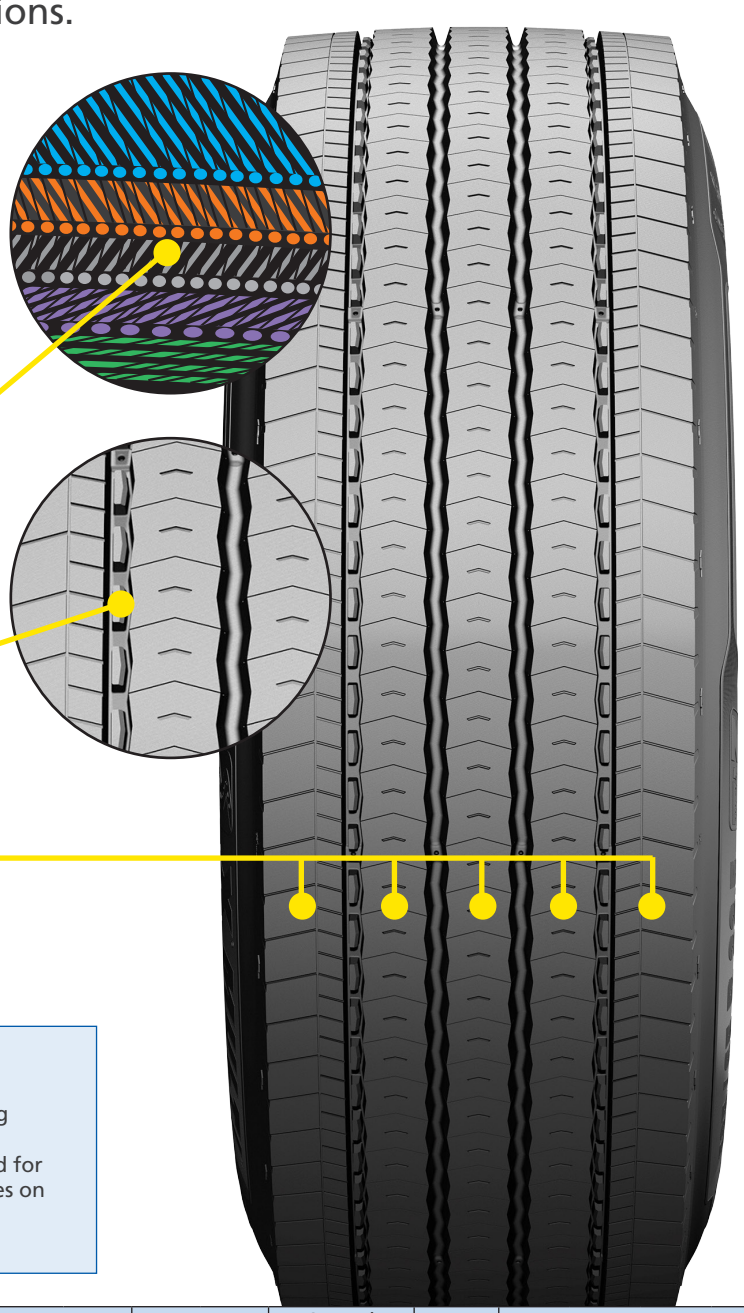

Mileage Performance –

- Rubber compound designed for mileage performance and heavy load, high scrub regional applications

Durability –

- High load capacity with optimal stability provided by Infini-Coil® technology
- Michelin Duracoil technology provides protection and reinforcement for bead stability and strength
- Stone ejectors and variable groove walls protect the casing for improved life

Performance –

- Five rib design provides significant cleaning and water evacuation, while improving wear life

The wide arrow shows the recommended start-of-life mounting direction for optimal tread performance. The small arrow demonstrates the alternate rolling direction which may be used for the second half of tread life. Michelin recommends that all tires on the same axle have the arrows facing in the same direction.

Size	Load Range	Catalog Number	Tread Depth	Max. Speed (*)		Loaded Radius		Overall Diameter		Overall Width (‡)		Approved Wheels (Measuring wheel listed first.)	Revs Per Mile	Max. Load and Pressure Single			
			32nds	mph	kph	in.	mm	in.	mm	in.	mm			lbs.	psi	kg.	kPa
385/65R22.5	L	00777	19	68	110	19.4	494	42.2	1073	15.0	381	11.75, 12.25	493	11000	130	5000	900

Note: Wheel listed first is the measuring wheel.
(*) Exceeding the lawful speed limit is neither recommended nor endorsed.
(‡) Overall width will change 0.1 inch (2.5 mm) for each 1/4 inch change in wheel width. Minimum dual spacing should be adjusted accordingly.
MICHELIN® tires and tubes are subject to a continuous development program. Michelin North America, Inc. reserves the right to change product specifications at any time without notice or obligations. MNA, Inc. continually updates its product information to reflect any changes in Industry Standards. Printed material may not reflect the current Load and Inflation information. Please visit business.michelinman.com for the latest product information. The actual load and inflation pressure used must not exceed the wheel manufacturer's maximum conditions. Never exceed a wheel manufacturer's limits without permission from the component manufacturer.

TO FIND OUT MORE
US: **business.michelinman.com**
CA: **business.michelin.ca**

FIND US ON FACEBOOK
michelintruck

CONTACT US ON THE WEB
US: **business.michelinman.com/contact-us**
CA: **business.michelin.ca/contact-us**

CONTACT US BY TELEPHONE
US: **1-888-622-2306**
CA: **1-888-622-2306**

Michelin North America Inc., One Parkway South, Greenville, SC 29615
Michelin North America (Canada) Inc., 2500 Daniel Johnson Blvd., Suite 500, Laval (QC) H7T 2P6
Copyright © 2021 MNA(C)I. All rights reserved.
Copyright © 2021 Michelin North America, Inc. All rights reserved. An Equal Opportunity Employer PDF Only (12/21)